Meeting of the Village of Buffalo Grove Village Board

Regular Meeting
January 19, 2021 at 7:30 PM

Fifty Raupp Blvd
Buffalo Grove, IL 60089-2100
Phone: 847-459-2500

1. Call to Order

A. Open Meetings Act Compliance

Pursuant to Public Act 101-0640 as well as the Disaster Proclamation and Executive Orders issued by Governor Pritzker, this meeting will be held electronically by utilizing the Zoom link below.

Zoom Link: www.vbg.org/januaury19meeting

Phone Number: 312-626-6799

Meeting ID: 868 5260 8055

Instructions for how the public can see, listen and/or participate in meetings are listed immediately below this statement.

In accordance with the Open Meetings Act, any person shall be permitted an opportunity to address public officials under the rules established and recorded in the Buffalo Grove Municipal Code. The Village President reserves the right to alter the order of the appearance of speakers to maintain decorum during the meeting.

B. Pledge of Allegiance

2. Approval of Minutes

A. Village Board - Regular Meeting - Jan 4, 2021 7:30 PM

3. Approval of Warrant

A. Approval of Warrant #1324 (Trustee Weidenfeld) (Staff Contact: Chris Black)

4. Village President's Report

A. R-2021-2 Resolution Extending Executive Order 2021-01 (President Sussman) (Staff Contact: Dane Bragg)

5. Village Manager's Report

6. Special Business

7. Reports from Trustees

8. Consent Agenda

All items listed on the Consent Agenda, which are available in this room this evening, are considered to be routine by the Village Board and will be enacted by one motion. There will be no separate discussion of these items unless a Board member or citizen so requests, in which

event, the item will be removed from the General Order of Business and considered after all other items of business on the Regular Agenda under New Business. (Attached).

A. R-2021-3 Resolution Relating to the Semi-Annual Review of Closed Session Minutes (Clerk Sirabian) (Staff Contact: Dane Bragg)

SUMMARY: The Corporate Authorities have determined that the closed session minutes noted in the attached resolution require confidential treatment.

B. Authorization to Waive Bids and to Purchase Replacement Beds (Trustee Smith) (Staff Contact: Mike Baker)

SUMMARY: Staff recommends a waiver of bids and authorization to purchase Sleep Number Adjustable Beds, at a price not to exceed $31,106.08 from Sleep Number Corporation. The full cost of this purchase will be funded through the Foreign Fire Tax Board.

C. Approval of 600 McHenry Road Development Improvement Agreement (Trustee Stein) (Staff Contact: Ted Sianis)

SUMMARY: The owner of 600 McHenry Road is proposing to reconstruct the existing building, requiring the approval of a Development Improvement Agreement. Staff recommends approval of the Development Improvement Agreement subject to the final engineering and Village Attorney review.

9. Ordinances and Resolutions

A. O-2021-6 Ordinance Authorizing the Waiver of Bids and Authorization to Purchase Liquid De-Icing "Beet Heet" (Trustee Pike) (Staff Contact: Brett Robinson)

B. R-2021-4 Resolution Authorizing Village Manager to Execute an Intergovernmental Agreement with Northwest Central Dispatch System for Federal Funds to Support the CAD/RMS Project (Trustee Smith) (Staff Contact: Dane Bragg)

10. Unfinished Business

11. New Business

12. Questions From the Audience

Questions from the audience are limited to items that are not on the regular agenda. In accordance with Section 2.02.070 of the Municipal Code, discussion on questions from the audience will be limited to 10 minutes and should be limited to concerns or comments regarding issues that are relevant to Village business. All members of the public addressing the Village Board shall maintain proper decorum and refrain from making disrespectful remarks or comments relating to individuals. Speakers shall use every attempt to not be repetitive of points that have been made by others. The Village Board may refer any matter of public comment to the Village Manager, Village staff or an appropriate agency for review.

13. Adjournment

The Village Board will make every effort to accommodate all items on the agenda by 10:30 p.m. The Board, does, however, reserve the right to defer consideration of matters to another meeting should the discussion run past 10:30 p.m.

The Village of Buffalo Grove, in compliance with the Americans with Disabilities Act, requests that persons with disabilities, who require certain accommodations to allow them to observe and/or

participate in this meeting or have questions about the accessibility of the meeting or facilities, contact the ADA Coordinator at 459-2525 to allow the Village to make reasonable accommodations for those persons.

MINUTES OF THE REGULAR MEETING OF THE VILLAGE BOARD OF THE VILLAGE OF BUFFALO GROVE HELD IN THE VILLAGE HALL, 50 RAUPP BOULEVARD, BUFFALO GROVE, ILLINOIS, AND VIA AUDIO/VIDEO CONFERENCING MONDAY, JANUARY 4, 2021

CALL TO ORDER

President Sussman called the meeting to order at 7:30 P.M. This meeting is being conducted in person and via audio and video conferencing.

ROLL CALL

Roll call indicated the following present in person and via audio/video conference: President Sussman; Trustees Ottenheimer, Weidenfeld, Johnson, Smith and Pike. Trustee Stein was present at Village Hall.

Also present via audio/video conference were: Dane Bragg, Village Manager, Patrick Brankin, Village Attorney; Jenny Maltas, Deputy Village Manager; Chris Stilling, Deputy Village Manager; Chris Black, Director of Finance; Evan Michel, Management Analyst; Mike Skibbe, Director of Public Works; Nicole Woods, Deputy Community Development Director; Brett Robinson, Director of Purchasing; Police Chief Casstevens; and Deputy Fire Chief Wagner.

APPROVAL OF MINUTES

Moved by Ottenheimer, seconded by Johnson, to approve the minutes of the December 7, 2020 Rescheduled Regular Meeting. Upon roll call, Trustees voted as follows:

AYES: 6 – Stein, Ottenheimer, Weidenfeld, Johnson, Smith, Pike
NAYS: 0 – None
Motion declared carried.

WARRANT #1323

Mr. Black read Warrant #1323. Moved by Smith, seconded by Stein, to approve Warrant #1323 in the amount of $5,111,801.52 authorizing payment of bills listed. Upon roll call, Trustees voted as follows:

AYES: 6 – Stein, Ottenheimer, Weidenfeld, Johnson, Smith, Pike
NAYS: 0 – None
Motion declared carried.

VILLAGE PRESIDENT'S REPORT

President Sussman introduced Resolution No. 2021-1 extending Executive Order 2020-12.

Mr. Bragg reviewed the proposed resolution.

Moved by Weidenfeld, seconded by Ottenheimer, to pass Resolution No. 2021-1, extending Executive Order 2020-12. Upon roll call, Trustees voted as follows:

AYES: 6 – Stein, Ottenheimer, Weidenfeld, Johnson, Smith, Pike
NAYS: 0 – None
Motion declared carried.

VILLAGE MANAGER'S REPORT

Mr. Bragg has no report this evening other than to wish everyone a healthy and Happy New Year.

REPORTS FROM TRUSTEES

There were no reports from Trustees.

CONSENT AGENDA

President Sussman explained the Consent Agenda, stating that any member of the audience or the Board could request that an item be removed for full discussion; there were no such requests. The Village Clerk read a brief synopsis of each of the items on the Consent Agenda.

Ordinance No. 2021-01 – Liquor Controls

Motion to pass Ordinance No. 2021-01, amending Chapter 5.20 – Liquor Controls. The Class A liquor license issued to Dvash, Inc. d/b/a Bait Café at 706 Buffalo Grove Road is hereby rescinded. The business has been sold.

Ordinance No. 2021-02 – Liquor Controls

Motion to pass Ordinance No. 2021-02, amending Chapter 5.20 - Liquor Controls. The Class B liquor license issued to Chanprung, LLC d/b/a/ Fuji Thai at 1000 Weiland Road is hereby rescinded. The business has opted not to renew their license.

Moved by Ottenheimer, seconded by Smith, to approve the Consent Agenda. Upon roll call, Trustees voted as follows on the Consent Agenda:

AYES: 6 – Stein, Ottenheimer, Weidenfeld, Johnson, Smith, Pike
NAYS: 0 – None
Motion declared carried.

ORDINANCE NO. 2021-3 – SPOERLEIN COMMONS

Moved by Johnson, seconded by Smith, to pass Ordinance No. 2021-3, amending Ordinance No. 83-8 for a new outbuilding, Special Use for a drive-through facility, and a Preliminary Plan approval with variations to the Zoning Ordinance and Sign Code at Spoerlein Commons Planned Development at 1131-1271 McHenry Road, in accordance with materials contained in Board packets.

Mr. Stilling reviewed the proposed ordinance, details of which are contained in his memo to Mr. Bragg of December 31, 2020, after which he answered questions from the Board.

Upon roll call, Trustees voted as follows:

AYES: 6 – Stein, Ottenheimer, Weidenfeld, Johnson, Smith, Pike
NAYS: 0 – None
Motion declared carried.

ORDINANCE NO. 2021-4 – SOFTWARE

Moved by Weidenfeld, seconded by Johnson, to pass Ordinance No. 2021-4, authorizing the Village Manager to execute a contract with BSnA for Community Development software, in accordance with materials contained in Board packets.

Mr. Stilling reviewed the proposed ordinance, details of which are contained in his memo to Mr. Bragg of December 21, 2020, after which he answered questions from the Board.

Board members thanked Mr. Robinson and the team for their efforts and hard work that they put into getting this contract. This upgrade is long overdue and will make the process more professional and convenient for developers and residents as well.

Upon roll call, Trustees voted as follows:

AYES: 6 – Stein, Ottenheimer, Weidenfeld, Johnson, Smith, Pike
NAYS: 0 – None
Motion declared carried.
.

BUSINESS ASSISTANCE PROGRAM

Mrs. Woods led the continued discussion as to whether or not the Board wishes to provide **Business Assistance Program**, summarizing the four options proposed and the feedback that staff is looking for from the Board, details of which are contained in the memo that she and Mr. Stilling sent to Mr. Bragg of December 31, 2020.

- Program 1: Waive Business License Fees - $130,000
- Program 2: Reduce Liquor License Fees for On-Premise Users - $45,000
- Program 3: Discount Restaurant's Local Food and Beverage Tax Payments - $150,000-$180,000
- Program 4: Restaurant Grant - $125,000

Lengthy Board discussion followed, with Trustees noting the following pros and cons of each Program:

- It was noted that the business license fee waiver would be of little help to a business, but would have a significant impact on the Village budget
- It was suggested that we should do something substantial or do nothing at all
- Any relief funds would significantly impact the Village budget, which has already been reduced by $1.9 million dollars through cost-saving measures
- There is a fiscal responsibility to residents, many of whom are also severely impacted by the pandemic
- Discounting food and beverage tax payment would also be of little help to a business, but would have a significant impact on the Village budget
- Efficiency in administering a relief program by Village staff, which has already been reduced
- Even though a grant would be of help, it is still not enough to save a business from failing, yet would have a significant impact on the Village budget
- Neighboring municipalities are not offering assistance
- None of these proposals are significant enough to make a difference in whether or not a business fails or succeeds
- Since restaurants are closed and cannot sell liquor, there is some merit in discounted liquor licenses
- Local municipalities are not in the business of rescuing businesses – relief should come from state or federal government
- Discounted liquor licenses would be in order, especially since Buffalo Grove is enforcing the Governor's order of no indoor-dining, while many surrounding municipalities are not
- Video gaming licenses should also be considered, since the facilities that use them are closed
- The Board wants to help all businesses that are struggling, but also needs to consider the impact on all residents

Mr. Bragg summarized the discussion, noting that it appears that there is only consensus for relief on liquor and video gaming licenses, and he would propose to bring this back to the Board at a February or March Committee of the Whole meeting.

QUESTIONS FROM THE AUDIENCE

President Sussman reviewed the parameters to be followed by speakers and asked if there were any questions from the audience on items not on tonight's agenda; there were no such questions.

ADJOURNMENT

Moved by Johnson, seconded by Weidenfeld, to adjourn the meeting. Upon roll call, Trustees voted as follows:

AYES: 6 – Stein, Ottenheimer, Weidenfeld, Johnson, Smith, Pike
NAYS: 0 – None
Motion declared carried.

The meeting was adjourned at 8:39 P.M.

_____
Janet M. Sirabian, Village Clerk

APPROVED BY ME THIS ___19th___DAY OF ___January___ 2021

_____
Village President

Action Item : Approval of Warrant #1324

Recommendation of Action

Staff recommends approval.

TOTAL WARRANT #1324 $1,386,847.89

ATTACHMENTS:

- W# 1324 SUMMARY (PDF)

Trustee Liaison	**Staff Contact**
Weidenfeld	Chris Black, Finance

Tuesday, January 19, 2021	

VILLAGE OF BUFFALO GROVE WARRANT #1324
19-Jan-21

General Fund:	**659,575.84**
Parking Lot Fund:	**459.09**
Motor Fuel Tax Fund:	**0.00**
Debt Service Fund:	**0.00**
School & Park Donations	**0.00**
Capital Projects-Facilities:	**33,193.73**
Capital Projects-Streets:	**47,930.40**
Health Insurance Fund:	**0.00**
Facilities Development Debt Service Fund:	**0.00**
Retiree Health Savings (RHS):	**23,095.14**
Water Fund:	**441,914.62**
Buffalo Grove Golf Fund:	**344.96**
Arboretum Golf Fund:	**4,635.17**
Refuse Service Fund:	**0.00**
Information Technology Internal Service Fund:	**107,777.56**
Central Garage Internal Service Fund:	**29,307.57**
Building Maintenance Internal Service Fund:	**38,613.81**
	1,386,847.89
PAYROLL PERIOD ENDING 01/07/2021	**1,133,777.43**
	1,133,777.43
TOTAL WARRANT #1324	**2,520,625.32**

APPROVED FOR PAYMENT BY THE PRESIDENT AND BOARD OF TRUSTEES OF THE VILLAGE OF BUFFALO GROVE, ILLINOIS

Village Clerk

Village President

Attachment: W# 1324 SUMMARY (Approval of Warrant #1324)

Resolution No. R-2021-2 : Resolution Extending Executive Order 2021-01

Recommendation of Action

Staff recommends approval.

Executive Order 2021-01 dated January 8, 2021 issued by Village President Beverly Sussman is hereby extended. Said extension shall be coterminous with the COVID-19 disaster proclamation issued by Governor J.B. Pritzker unless further amended or modified.

ATTACHMENTS:

- Resolution Extending the Local Disaster Emergency Proclamation 2021.01.1 (DOCX)
- 1.8.21 EO (DOCX)

Trustee Liaison
Sussman

Staff Contact
Dane Bragg, Office of the Village Manager

Tuesday, January 19, 2021	

RESOLUTION EXTENDING EXECUTIVE ORDER 2021-01

WHEREAS, on January 8, 2021, Village President, Beverly Sussman, issued Executive Order 2021-01 based upon the COVID-19 pandemic;

WHEREAS, the diagnosed cases of COVID-19 in the local area and the State of Illinois continue to increase;

WHEREAS, Illinois Governor J.B. Pritzker declared all counties in the State of Illinois as a disaster area on March 9, 2020 and further extended that declaration until February 6, 2021; and;

WHEREAS, it is necessary and appropriate for the Village of Buffalo Grove to continue to take measures to protect the public's health in response to the COVID-19 outbreak;

WHEREAS, the Village Board finds that the present situation requires the extension of the Village President's Executive Order 2021-01;

NOW, THEREFORE, be it resolved as follows:

Executive Order 2021-01 dated January 8, 2021 issued by Village President Beverly Sussman is hereby extended. Said extension shall be coterminous with the COVID-19 disaster proclamation issued by Governor J.B. Pritzker unless further amended or modified.

This Resolution shall be filed with the Village Clerk as soon as is practical and spread of record to all appropriate agencies.

AYES: _____
NAYES: _____
ABSENT: _____

Passed _____, 2021
Approved _____, 2021

Approved:

_____
Beverly Sussman, Village President

Attest:

_____
Janet Sirabian, Village Clerk

Attachment: Resolution Extending the Local Disaster Emergency Proclamation 2021.01.1 (R-2021-2 : Extending Executive Order 2021-01)

January 8, 2021

EXECUTIVE ORDER 2021-01

AMENDMENT TO EXECUTIVE ORDERS 2020-01, 2020-03, 2020-04, 2020-05, 2020-06, 2020-07, 2020-08, 2020-09, 2020-10, 2020-11, and 2020-12

WHEREAS, on March 17, 2020, I issued Executive Order 2020-01 in response to the COVID-19 Pandemic; and

WHEREAS, on April 23, 2020, I issued Executive Order 2020-03 in response to the COVID-19 Pandemic; and

WHEREAS, on April 26, 2020, I issued Executive Order 2020-04 in response to the COVID-19 Pandemic; and

WHEREAS, on May 28, 2020, I issued Executive Order 2020-05 in response to the COVID-19 Pandemic; and

WHEREAS, on June 26, 2020, I issued Executive Order 2020-06 in response to the COVID-19 Pandemic; and

WHEREAS, on July 24, 2020, I issued Executive Order 2020-07 in response to the COVID-19 Pandemic; and

WHEREAS, on August 24, 2020, I issued Executive Order 2020-08 in response to the COVID-19 Pandemic; and

WHEREAS, on September 21, 2020, I issued Executive Order 2020-09 in response to the COVID-19 Pandemic; and

WHEREAS, on October 16, 2020, I issued Executive Order 2020-10 in response to the COVID-19 Pandemic; and

WHEREAS, on November 16, 2020 I issued Executive Order 2020-11 in response to the COVID-19 Pandemic; and

WHEREAS, on December 11, 2020 I issued Executive Order 2020-12 in response to the COVID-19 Pandemic; and

WHEREAS, on January 8, 2021, the State of Illinois issued a new executive order and new guidance regarding the Stay at Home Order issued by Governor JB Pritzker as well as guidance regarding face coverings and said order is numbered 2021-01; and

WHEREAS, I find that in order to maintain consistency and clarity as to the measures to be taken help reduce the spread of COVID-19 effectively and safely there should be consistency with the Governor's Order 2021-01 and my previous Orders;

THEREFORE, by the powers vested in me as the President of Buffalo Grove, and pursuant to Section 2.56 of the Village Code, I hereby order the following:

Section 1. Executive Orders 2020-01, 2020-03, 2020-04, 2020-05, 2020-06, 2020-07, 2020-

08, 2020-09, 2020-10, 2020-11 and 2020-12 are hereby amended to adopt and incorporate Governor Pritzker's Order 2021-01, a copy of which is attached hereto as Exhibit A and adopted herein by this reference.

Section 2. All provisions of the prior Executive Orders 2020-01 and 2020-03, 2020-04, 2020-05, 2020-06,2020-07, 2020-08, 2020-09, 2020-10, 2020-11 and 2020-12 I have issued are repealed except as specifically set forth below.

Section 3. The Village of Buffalo Grove Village Hall and all Village public lobbies, offices and meeting rooms in public buildings are hereby closed except for essential services which shall be continued to be provided. The Village Manager may also open these facilities at his discretion. In the event that in-person service is needed, residents are to schedule an appointment using the information that is set forth on the Village website. The Village Manager may schedule Board and Commission meetings necessary to conduct Village business, at his discretion. Said meetings may occur telephonically, virtually or in person, in accordance with the Governor's Orders and state law.

Section 4. All activities of soliciting, as defined in Chapter 5.24 of the Buffalo Grove Municipal Code, are hereby prohibited until further notice.

Section 5. Any individual who is over age two and able to medically tolerate a face covering (a mask or cloth face covering) shall be required to cover their nose and mouth with a face covering at all times when in a public place or when outdoors and unable to maintain a six-foot social distance. A business owner or operator shall refuse admission or service to any individual who fails to wear face coverings as required by this Order. Additionally, all businesses subject to this Order shall post a notice at all public entrances, stating "Entrance Prohibited Without Face Covering". Said notice shall be visible by the public prior to entering the establishment and shall be in bold text a minimum of 75 type font in size and in the color and type attached hereto as Exhibit B.

Section 6. Restaurants. Consistent with the guidelines issued by the State of Illinois and attached hereto as Exhibit C and any Amendments thereto, restaurants may allow dining, including consumption of liquor subject to approval by the Liquor Control Commissioner. The Village Manager may promulgate rules governing the operation of restaurants including, but not limited to, sanitation, dining areas, permits, license, hours of operation and public health requirements as required during the duration of this Order.

Section 7. Penalty. The Village of Buffalo Grove Police Department and Community Development Department are authorized to enforce this Executive Order. In addition to other remedies the Village may seek, any violation of this Executive Order may subject the violator to a penalty as set forth in Chapters 1.08 and 1.12 of the Village Code.

Section 8. Golf courses are permitted to operate within the restrictions of Executive Order 2020-59 and any restrictions published by the Illinois Department ofCommerce and Economic Opportunity.

Section 9. This Executive Order shall be distributed in accordance with the Village Code.

Section 10. This Executive Order shall expire not later than the adjournment of the first regular meeting of the Corporate Authorities after the date of this Order unless sooner terminated by

Beverly Sussman

Beverly Sussman, Village President

Proclamation of the Village President or unless amended or extended pursuant to the Village Code.

STATE OF ILLINOIS)
) ss.
COUNTY OF LAKE)

ACKNOWLEDGEMENT

I, the undersigned, a Notary Public, in and for the County and State aforesaid, **DO HEREBY CERTIFY** that Beverly Sussman, the Village President of the Village of Buffalo Grove, personally known to me, appeared before me, under oath, this day in person and acknowledged that in such capacity she signed and delivered the said instrument, as her free and voluntary act of the uses and purposes therein set forth.

GIVEN under my hand and notarial seal this 8th day of January, 2021.

Resolution No. R-2021-3 : Resolution Relating to the Semi-Annual Review of Closed Session Minutes

Recommendation of Action

Staff recommends approval.

SUMMARY: The Corporate Authorities have determined that the closed session minutes noted in the attached resolution require confidential treatment.

ATTACHMENTS:

- RESOLUTION - 011921 (DOC)

Trustee Liaison
Ms. Sirabian

Staff Contact
Dane Bragg, Office of the Village Manager

Tuesday, January 19, 2021	

RESOLUTION No. 2021-

RESOLUTION RELATING TO THE SEMI-ANNUAL REVIEW OF CLOSED SESSION MINUTES

BE IT RESOLVED BY THE PRESIDENT AND BOARD OF TRUSTEES OF THE VILLAGE OF BUFFALO GROVE, COOK AND LAKE COUNTIES, ILLINOIS, pursuant to Section 2.06 of the Open Meetings Act:

SECTION ONE: On December 7, 2020, the Corporate Authorities of the Village voted to approve the following Closed Session minutes:

September 21, 2020 November 16, 2020

SECTION TWO: The Corporate Authorities of the Village determine that the need for confidentiality still exists with regard to the approved minutes listed in Section One.

SECTION THREE: This Resolution shall be in full force and effect from and after its passage and approval.

AYES: _____

NAYS: _____

ABSENT: _____

PASSED AND APPROVED this 19th day of January, 2021

_____
Beverly Sussman, Village President

ATTEST:

_____
Janet Sirabian, Village Clerk

Action Item : Authorization to Waive Bids and to Purchase Replacement Beds

Recommendation of Action

Staff recommends approval.

SUMMARY: Staff recommends a waiver of bids and authorization to purchase Sleep Number Adjustable Beds, at a price not to exceed $31,106.08 from Sleep Number Corporation. The full cost of this purchase will be funded through the Foreign Fire Tax Board.

ATTACHMENTS:

- FFT Purchase Memo-Baker revisions (DOCX)
- Sleep Number - Updated (PDF)

Trustee Liaison	**Staff Contact**
Smith	Mike Baker, Fire

Tuesday, January 19, 2021	

VILLAGE OF
BUFFALO GROVE

MEMORANDUM

DATE: January 15, 2021

TO: Dane Bragg, Village Manager

FROM: Mike Baker, Fire Chief

SUBJECT: Fire Department Bed Purchase

Background

Each Buffalo Grove Fire Station is outfitted with beds for on duty shift personnel, all of which are approaching 10 years old and are experiencing maintenance issues. After receiving three quotes directly through the manufacturers for comparable products, the Sleep Number Corporation was identified as the lowest cost supplier for replacement adjustable beds. During its November 5, 2020 meeting, the Buffalo Grove Foreign Fire Tax (FFT) Board approved funding not to exceed $31,000 for the purchase of 23 adjustable beds and associated supplies from the Sleep Number Corporation. The initial purchase of these beds was split between the fire department and the FFT Board, with this purchase being funded wholly by the FFT.

If authorized by the Village Board, this purchase would replace all of the beds currently in place in Fire Stations 25, 26, and 27.

Vendor	Total Price
Sleep Number	$30,106.08
Air-Pedic	$31,009.00
Personal Comfort	$39,042.06

Recommendation

Staff recommends authorization to purchase Sleep Number Adjustable Bed, at a price not to exceed $31,106.08 from Sleep Number Corporation in Minneapolis, MN as detailed in the attached quotation.

sleep number

Quotation

Quotation # 44183.55696
Issued Date 12/18/2020
Expires Date 2/16/2021
Customer #
PO #

Remit To Sleep Number Corporation
NW 6147 PO BOX 1450
Minneapolis, MN 55485-6147

Bill To Buffalo Grove Fire Dept

Email: a.budnik123@gmail.com
Phone :
Acct #
Store Ref:

Ship To

Email:
Phone :
Cust #
HD Timeframe: 2-3 weeks from date of purchase

QTY	SKU	Description	Ship Via	MSRP	Discount %	Discount $	Ext Price		Line Total
23	XR5	r5 Twin Extra Long	UPS	$ 1,649.00	-	$ 700.00	$ 949.00	$ -	$ 21,827.00
23	XF31S	Modular Base, Twin Extra-long	UPS	$ 249.00	-	$ 95.00	$ 154.00	$ -	$ 3,542.00
23	118141	Mod Base Legs, T,TXL,F,D, 6 legs	UPS	$ 79.99	-	$ 30.00	$ 49.99	$ -	$ 1,149.77
23	421841	Total Encasement Mattress Set, TwinXL	UPS	$ 119.99	-	$ 48.00	$ 71.99	$ -	$ 1,655.77
23	423668	Kids Mattress Pad, Twin	UPS	$ 119.99	-	$ 96.00	$ 23.99	$ -	$ 551.77
23	UPS	UPS GROUND DELIVERY	UPS	$ 134.99	-	$ 75.00	$ 59.99	$ -	$ 1,379.77
	-	-	-	$ -	0%	$ -	$ -	$ -	$ -
	-	-	-	$ -	0%	$ -	$ -	$ -	$ -
	-	-	-	$ -	0%	$ -	$ -	$ -	$ -
		Tax is Estimated and finalized at purchased. Tax is removed with a Tax Exemption Certification					Subtotal		$ 30,106.08
							Tax Rate:	0.000%	$ -
REF					**You Saved**	**$ 24,012.00**	TE#	**Order Total**	**$ 30,106.08**

PREPAY VIA CHECK OR CREDIT CARD, LOCAL SALES TAX WILL APPLY UNLESS A TAX EXEMPT CERTIFICATE IS PROVIDED

All prices referenced above are for confidential use. DO NOT DISCUSS PRICING WITH RETAIL PERSONNEL OR RETAIL CONSUMERS.

Disclosure of pricing will result in immediate termination of quote, exclusive pricing, and/or business relationship.

GOODS PURCHASED THROUGH THIS AGREEMENT ARE NOT ELIGIBLE FOR SLEEP NUMBER'S 100 NIGHT TRIAL PERIOD

ALL COMMERCIAL SALES ARE FINAL - NO RETURNS OR EXCHANGES

By signing this, you agree to the notes and conditions described above and that you have verified the size, model and style being ordered.

Authorized Name Signature Date

Sleep Number Corp. Commercial Sales
1001 Third Ave. S
Minneapolis, MN 55404
Phone: 1-800-394-4735
FAX: 1-800-398-5763
Email: commercialsales@sleepnumber.com

Attachment: Sleep Number - Updated (Authorization to Waive Bids and Purchase Replacement Beds)

Action Item : Approval of 600 McHenry Road Development Improvement Agreement

Recommendation of Action

Staff recommends approval.

SUMMARY: The owner of 600 McHenry Road is proposing to reconstruct the existing building, requiring the approval of a Development Improvement Agreement. Staff recommends approval of the Development Improvement Agreement subject to the final engineering and Village Attorney review.

ATTACHMENTS:

- Animal Hospital Memo_1-6-2021 (DOCX)
- Buffalo Grove AH EOPC 18DEC20 (PDF)
- 20039-final-R2 (PDF)
- DIA_Animal Care Center_600 McHenry Rd (DOCX)

Trustee Liaison	**Staff Contact**
Stein	Ted Sianis, Engineering

Tuesday, January 19, 2021	

VILLAGE OF
BUFFALO GROVE

MEMORANDUM

DATE: January 14, 2021

TO: Dane Bragg, Village Manager

FROM: Ted Sianis, Civil Engineer II

SUBJECT: Animal Hospital of Buffalo Grove Development Improvement Agreement

---

The Animal Hospital of Buffalo Grove, owners and developers of 600 McHenry Rd proposed a building addition for their new business located at the southwest corner of IL-83 and Buffalo Grove Road. Due to structural issues with the existing building, a new building will be built in the same location as the existing building. This new construction now requires a Development Improvement Agreement.

The Development Improvement Agreement, or DIA, is an agreement between the Developer and the Village and identifies the items to be constructed by the developer on the project site in addition to the building addition. Typical items include the stormwater management, parking lot, and all of the utilities such as water main and sanitary sewer. With this agreement, the developer agrees to provide security as required in the Village Code until the developer completes the required items. Stormwater management is not required of this development.

Attachment: Animal Hospital Memo_1-6-2021 (600 McHenry Road DIA)

Advantage Consulting Engineers

80 Main Street - Suite 17 - Lemont, Illinois 60439
630-520-2467

ENGINEER'S OPINION OF PROBABLE CONSTRUCTION COST

PROJECT: **BUFFALO GROVE ANIMAL HOSPITAL**

LOCATION: BUFFALO GROVE, IL

PROJECT NO.: 20-039

CLIENT : **RWE MANAGEMENT**
BURR RIDGE, IL

DATE PREPARED: 15-Dec-20
LAST REVISED: 16-Dec-20

PREPARED BY: TPP
CHECKED BY: WJZ

Attachment: Buffalo Grove AH EOPC 18DEC20 (600 McHenry Road DIA)

FILE NAME:20039-EOPC.xls
12/18/2020

Engineer's Opinion of Probable Construction Cost

BUFFALO GROVE ANIMAL HOSPITAL

ITEM	QNTY	UNIT	UNIT PRICE	AMOUNT
1. 1.5" H.M.A. BITUMINOUS SURFACE COURSE	130	S.Y.	$ 30.00	$ 3,900.00
2. 2.5" H.M.A. BITUMINOUS BINDER COURSE	130	S.Y.	$ 29.00	$ 3,770.00
3. GRIND & RESURFACE EXISTING PAVEMENT	400	S.Y.	$ 30.00	$ 12,000.00
4. STRIPING, WHEEL STOPS	1	L.S.	$ 1,600.00	$ 1,600.00
5. SIGN PANELS WITH POST	2	EACH	$ 400.00	$ 800.00
6. REMOVE & REPLACE SIDEWALK	50	SF	$ 12.00	$ 600.00
7. REMOVE & REPLACE C&G	10	L.F.	$ 50.00	$ 500.00
8. 4-INCH WATER SERVICE	160	L.F.	$ 80.00	$ 12,800.00
9. 4-INCH PRESSURE CONNECTION	1	EACH	$ 8,500.00	$ 8,500.00
10. TRENCH BACKFILL	160	L.F.	$ 22.00	$ 3,520.00
11. SILT FENCING	315	L.F.	$ 2.50	$ 787.50
12. INLET EROSION CONTROL	2	EACH	$ 375.00	$ 750.00
13. CONCRETE WASHOUT AREA	1	EACH	$ 1,250.00	$ 1,250.00
			Engineer's Opinion of Probable Costs =	$ 50,777.50
			10% CONTINGENCY =	$ 5,077.75
			Letter of Credit Amount at 108% =	$ 60,324.00
			Engineering Review Fee =	$ 1,778.00
			(Minimum $5,000) CASH Deposit =	~~$ 603.00~~
			~~Letter of Credit Amount =~~	~~$ 59,721.00~~
			FINAL Letter of Credit Amount =	**$ 55,324.00**

$5,000.00

Attachment: Buffalo Grove AH EOPC 18DEC20 (600 McHenry Road DIA)

FINAL SITE IMPROVEMENT PLANS

FOR

ANIMAL CARE CENTER OF BUFFALO GROVE

600 MCHENRY ROAD

BUFFALO GROVE, ILLINOIS

CALL J.U.L.I.E. 1–800–892–0123
WITH THE FOLLOWING:

COUNTY: LAKE
CITY, TOWNSHIP: BUFFALO GROVE, VERNON
SEC. & SEC. NO.: SEC 32,33, T43N, R11E

48 HOURS BEFORE YOU DIG.
EXCLUDING SAT., SUN. & HOLIDAYS

DEVELOPER

RWE
DESIGN BUILD

16W361 S. FRONTAGE ROAD, SUITE 106
BURR RIDGE, ILLINOIS 60527

ADVANTAGE NOTE

ADVANTAGE CONSULTING ENGINEERS IS TO BE NOTIFIED AT LEAST THREE (3) DAYS PRIOR TO CONSTRUCTION. STAKING REQUESTS FIVE (5) DAYS NOTICE BETWEEN SEPTEMBER 15th AND DECEMBER 15th AND SHALL BE INCLUDED IN THE PRECONSTRUCTION MEETINGS.

THESE PLANS ARE COLOR CODED. CONTRACTOR/REVIEWER WILL NEED TO PRINT IN COLOR OR VIEW PDF.

BENCHMARK

ELEVATION:
DESCRIPTION: SEE SHEET EX1 FOR BENCHMARK INFORMATION

EXISTING TOTAL SITE AREA: 0.52 ACRES
PROPOSED PROJECT AREA: 0.20 ACRES

LOCATION MAP

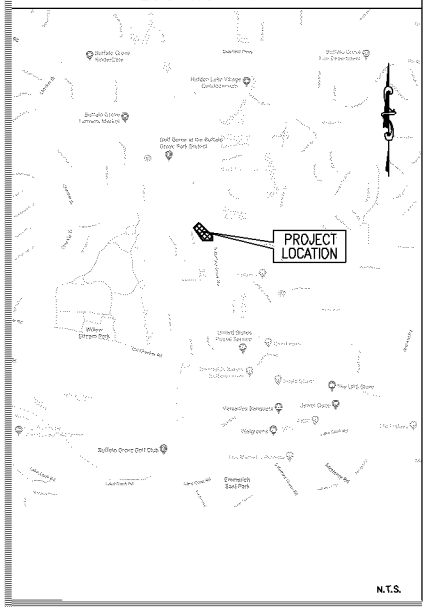

INDEX

SHEET #	SHEET I.D.	SHEET DESCRIPTION
1	C1	COVER SHEET
2	EX1	EXISTING CONDITIONS AND DEMOLITION PLAN
3	L1	GEOMETRIC PLAN
4	GU1	SITE IMPROVEMENT PLAN
5	S1	SPECIFICATIONS
6–7	D1–D2	DETAILS

REVISIONS

ORIGINAL PLAN DATE: JUNE 30, 2020

#	SHEET #	REMARKS	DATE
1	ALL	REVISED PER VILLAGE	08/03/20
2	3,4	BUILDING REVISED	12/21/20

ENGINEER: WILLIAM J. ZALESKI, P.E.
BILL@ACENG.US

ILLINOIS REGISTRATION NO.: 062–046121
EXPIRATION DATE: 11/30/2021

PROFESSIONAL DESIGN FIRM NO.: 184–007386
EXPIRATION DATE: 4/30/2021

THESE PLANS OR ANY PART THEREOF SHALL BE CONSIDERED VOID WITHOUT THE SIGNATURE , SEAL AND EXPIRATION DATE OF SEAL OF THE ENGINEER

12/21/20
DATE

WILLIAM J. ZALESKI
062–46121
REGISTERED PROFESSIONAL ENGINEER OF ILLINOIS

ACE

20-039
BG A.H.
DEC 21, 2020

ADVANTAGE CONSULTING ENGINEERS
80 MAIN STREET - SUITE 17 - LEMONT, ILLINOIS 60439
630-520-2467 WWW.acEng.us

Copyright © 2020 Advantage Consulting Engineers, LLC

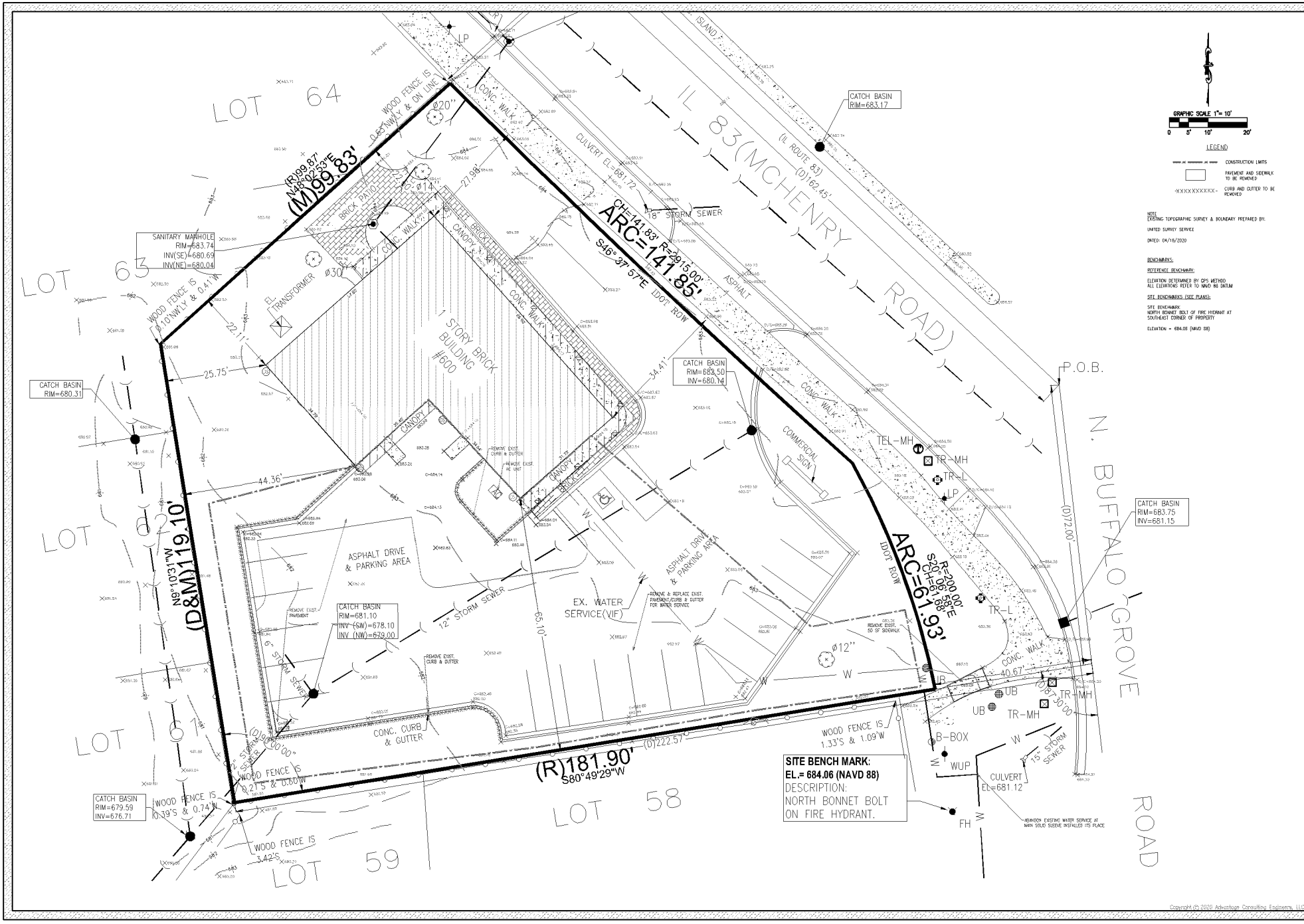

NOTE
EXISTING TOPOGRAPHIC SURVEY & BOUNDARY PREPARED BY:

UNITED SURVEY SERVICE

DATED: 04/16/2020

BENCHMARKS:

REFERENCE BENCHMARK:

ELEVATION DETERMINED BY GPS METHOD
ALL ELEVATIONS REFER TO NAVD 88 DATUM

SITE BENCHMARKS (SEE PLANS):

SITE BENCHMARK:
NORTH BONNET BOLT OF FIRE HYDRANT AT SOUTHEAST CORNER OF PROPERTY

ELEVATION = 684.06 (NAVD 88)

NO.	DATE	REVISED PER VILLAGE	REMARKS
1.	08/10/20		

ADVANTAGE
CONSULTING ENGINEERS
80 MAIN STREET, SUITE 17 - LEMONT, ILLINOIS 60439
(630) 620-0487 www.advantage-ce.com

EXISTING CONDITIONS
BUFFALO GROVE ANIMAL HOSPITAL
600 MCHENRY ROAD
BUFFALO GROVE, ILLINOIS

RWE MANAGEMENT COMPANY
16W361 S. FRONTAGE ROAD, SUITE 106
BURR RIDGE, ILLINOIS 60527

JULY 3, 2020
JOB: 20-030

SHEET:
EX1
1 OF 7

Copyright (C) 2020 Advantage Consulting Engineers, LLC

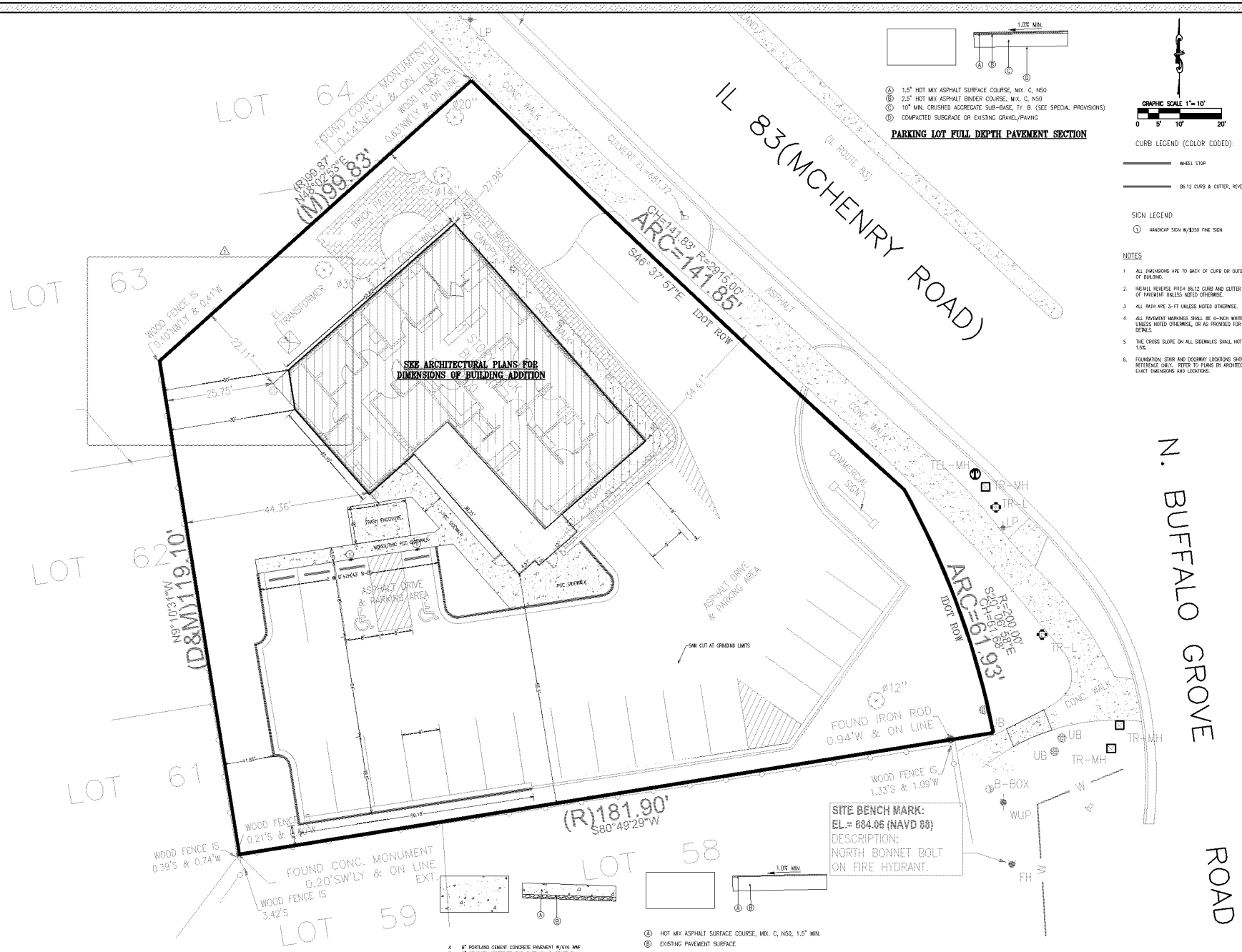

Ⓐ 1.5" HOT MIX ASPHALT SURFACE COURSE, MIX. C, N50
Ⓑ 2.5" HOT MIX ASPHALT BINDER COURSE, MIX. C, N50
Ⓒ 10" MIN. CRUSHED AGGREGATE SUB-BASE, TY. B. (SEE SPECIAL PROVISIONS)
Ⓓ COMPACTED SUBGRADE OR EXISTING GRAVEL/PAVING

PARKING LOT FULL DEPTH PAVEMENT SECTION

CURB LEGEND (COLOR CODED):

WHEEL STOP

B6.12 CURB & GUTTER, REVERSE PITCH

SIGN LEGEND:

① HANDICAP SIGN W/$350 FINE SIGN

NOTES

1. ALL DIMENSIONS ARE TO BACK OF CURB OR OUTSIDE FACE OF BUILDING.
2. INSTALL REVERSE PITCH B6.12 CURB AND GUTTER AT EDGE OF PAVEMENT UNLESS NOTED OTHERWISE.
3. ALL PADS ARE 3-FT UNLESS NOTED OTHERWISE.
4. ALL PAVEMENT MARKINGS SHALL BE 4-INCH WHITE PAINT UNLESS NOTED OTHERWISE, OR AS PROVIDED FOR ON THE PLANS.
5. THE CROSS SLOPE ON ALL SIDEWALKS SHALL NOT EXCEED 1.5%.
6. FOUNDATION, STAIR AND DOORWAY LOCATIONS SHOWN FOR REFERENCE ONLY. REFER TO PLANS BY ARCHITECT FOR EXACT DIMENSIONS AND LOCATIONS.

A 8" PORTLAND CEMENT CONCRETE PAVEMENT W/6X6 WWF
B 8" CRUSHED AGGREGATE SUB-BASE, CA-6, GRADE 8

P.C.C. DUMPSTER PAD

Ⓐ HOT MIX ASPHALT SURFACE COURSE, MIX. C, N50, 1.5" MIN.
Ⓑ EXISTING PAVEMENT SURFACE

PARKING LOT- OVERLAY PAVEMENT SECTION

NO.	DATE	REMARKS
1.	08/10/20	REVISED PER VILLAGE
2.	12/21/20	BUILDING REVISED

ADVANTAGE CONSULTING ENGINEERS
80 MAIN STREET, SUITE 17 - LEMONT, ILLINOIS 60439
(708) 430-2467 www.advantage.us

GEOMETRIC PLAN
BUFFALO GROVE ANIMAL HOSPITAL
600 MCHENRY ROAD
BUFFALO GROVE, ILLINOIS

RWE DESIGN BUILD
16W361 S. FRONTAGE ROAD, SUITE 106
BURR RIDGE, ILLINOIS 60527

JULY 3, 2020
JOB: 20-030

SHEET:
L1
3 OF 7

Copyright (C) 2020 Advantage Consulting Engineers, LLC

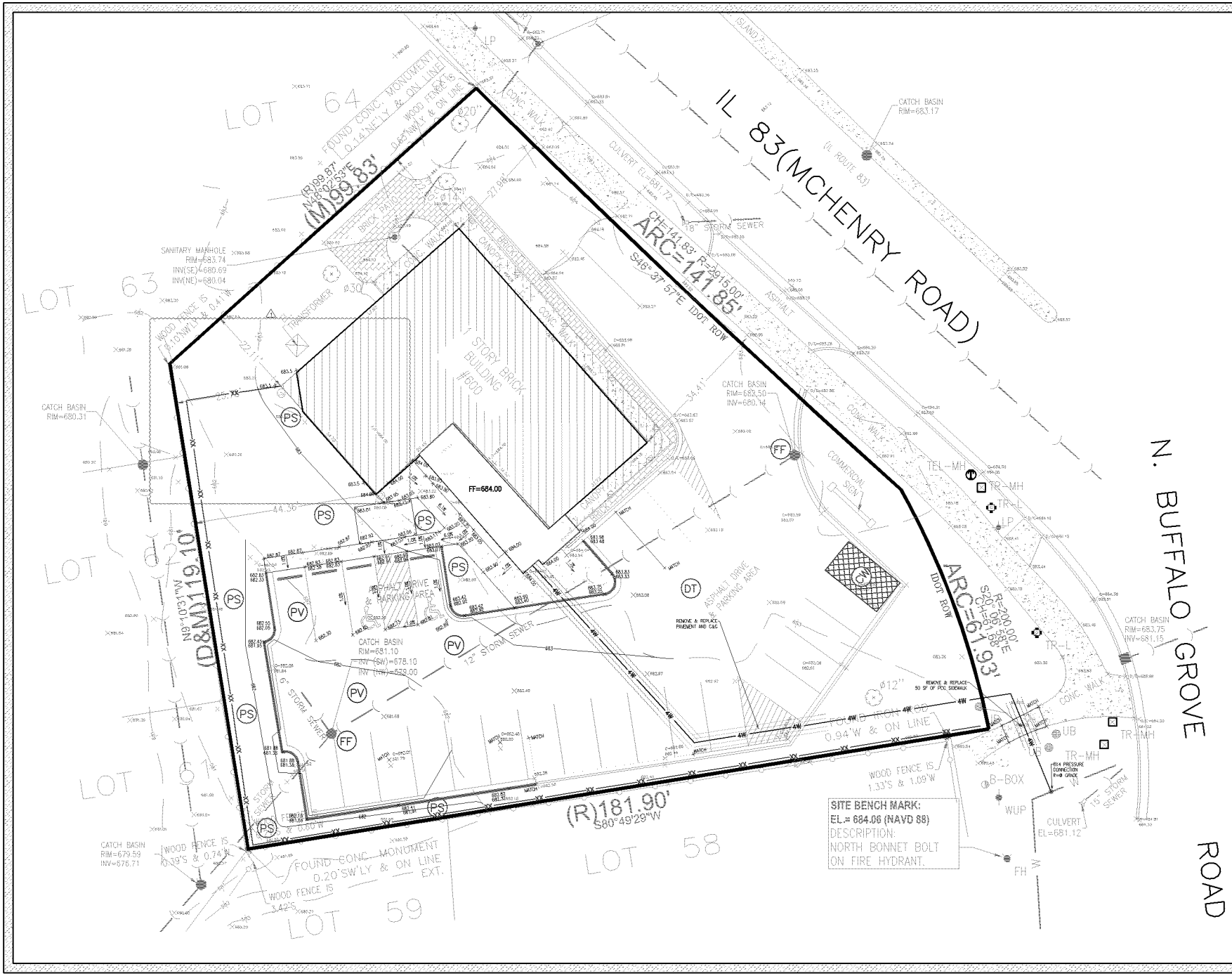

GRAPHIC SCALE 1" = 10'

0 5' 10' 20'

GRADING NOTES

1. ALL SPOT ELEVATIONS SHOWN AT CURB ARE TOP OF CURB ELEVATIONS
2. ALL ELEVATIONS SHOWN ON PLANS ARE FINISHED GRADE ELEVATIONS.
3. ALL EROSION AND SEDIMENT CONTROL MEASURES MUST BE INSTALLED AND AN EROSION CONTROL INSPECTION COMPLETED BY VILLAGE ENGINEERING DEPARTMENT PRIOR TO START CONSTRUCTION.
4. CONTRACTOR SHALL MAINTAIN POSITIVE SITE DRAINAGE DURING CONSTRUCTION.
5. ALL PROPOSED GRADES SHALL MATCH EXISTING GRADES AT THE PROPERTY LINE.
6. SEE SPECIFICATIONS FOR SUBGRADE AND STRUCTURAL FILL COMPACTION REQUIREMENTS.
7. THE CROSS SLOPE ON ALL SIDEWALKS SHALL NOT EXCEED 1.5%.

EROSION CONTROL LEGEND

- DT — DUST CONTROL
- PV — PAVING
- PS — PERMANENT SEEDING
- CW — CONCRETE WASHOUT
- IP — INLET PROTECTION
- XX — SILT FENCE OR SILTWORM

UTILITY NOTES:

1. ALL WATER MAIN SHALL BE D.I.P. CLASS 52 UNLESS NOTED OTHERWISE.
1. CONTRACTOR TO FIELD VERIFY LOCATION/SIZE OF EXISTING UTILITIES FOR CONNECTION OF PROPOSED UTILITIES.
2. CONTRACTOR SHALL COORDINATE ANY ROAD CLOSURES FOR OPEN CUT UTILITY WORK WITH THE APPROPRIATE AUTHORITIES.
3. ═══ = TRENCH BACKFILL
4. —4W— 4" WATER SERVICE
5. NEW WATER SERVICE LINE SHALL BE PRESSURE TESTED AND CHLORINATED TO VILLAGE SPECIFICATIONS.

IMPERVIOUS AREA SUMMARY (S.F.)		
DESCRIPTION	PROPOSED	EXISTING
BUILDING	3,567	3,091
PAVEMENT	9,993	10,954
SIDEWALK	1,440	806
PATIO	370	370
DUMPSTER	126	-
TOTAL	15,496	15,221

VILLAGE CONTACT INFORMATION:

ENGINEERING DEPARTMENT: 847-459-2523

BUILDING DEPARTMENT: 847-459-2530

NO.	DATE	REMARKS
1.	08/07/20	REVISED PER VILLAGE
2.	12/21/20	BUILDING REVISED

ADVANTAGE CONSULTING ENGINEERS
81 MAIN STREET, SUITE 17 - LEMONT, ILLINOIS 60439
(708) 430-2487 www.advantage.us

SITE IMPROVEMENT PLAN
BUFFALO GROVE ANIMAL HOSPITAL
600 MCHENRY ROAD
BUFFALO GROVE, ILLINOIS

RWE DESIGN BUILD
16W361 S. FRONTAGE ROAD, SUITE 106
BURR RIDGE, ILLINOIS 60527

JULY 3, 2020
JOB: 20-030

SHEET:
GU1
4 OF 7

Copyright (©) 2020 Advantage Consulting Engineers, LLC

GENERAL NOTES

1. ALL PAVING AND RELATED CONSTRUCTION SHALL CONFORM TO THE STANDARD SPECIFICATIONS FOR ROAD AND BRIDGE CONSTRUCTION, LATEST EDITION BY ILLINOIS DEPARTMENT OF TRANSPORTATION AND ALL IMPROVEMENTS THEREIN MADE IN ACCORDANCE WITH THE LATEST EDITION OF THE SUBDIVISION REGULATIONS OF THE MUNICIPALITY. IN CASE OF CONFLICT, THE MORE RESTRICTIVE CODE WILL TAKE PRECEDENCE SHALL TAKE PRECEDENCE.
2. ALL STORM SEWER, SANITARY SEWER AND WATER MAIN CONSTRUCTION SHALL CONFORM TO THE STANDARD SPECIFICATIONS FOR WATER AND SEWER MAIN CONSTRUCTION IN ILLINOIS, LATEST EDITION, AND IN ACCORDANCE WITH THE CURRENT SUBDIVISION REGULATIONS OF THE MUNICIPALITY UNLESS OTHERWISE NOTED ON THE PLANS.
3. STANDARD SPECIFICATIONS, SUPPLEMENTAL SPECIFICATIONS AND RECURRING SPECIAL PROVISIONS, CONSTRUCTION PLANS, AND SUBSEQUENT DETAILS ARE ALL TO BE CONSIDERED AS PART OF THE CONTRACT. INCIDENTAL ITEMS OR ACCESSORIES NECESSARY TO COMPLETE THIS WORK MAY NOT BE SPECIFICALLY NOTED BUT ARE CONSIDERED A PART OF THIS CONTRACT.
4. THE CONTRACTOR SHALL BE RESPONSIBLE FOR HAVING THE UTILITY COMPANIES LOCATE THEIR FACILITIES IN THE FIELD PRIOR TO CONSTRUCTION AND SHALL ALSO BE RESPONSIBLE FOR THE MAINTENANCE AND PRESERVATION OF THESE FACILITIES. THE ENGINEER DOES NOT WARRANT THE LOCATION OF ANY EXISTING UTILITIES SHOWN ON THE PLAN. THE CONTRACTOR SHALL CALL J.U.L.I.E. AT 800-892-0123, AND THE MUNICIPALITY FOR UTILITY LOCATIONS.
5. NO CONSTRUCTION PLAN SHALL BE USED FOR CONSTRUCTION UNLESS SPECIFICALLY MARKED "FOR CONSTRUCTION" PRIOR TO COMMENCEMENT OF CONSTRUCTION. THE CONTRACTOR SHALL VERIFY ALL DIMENSIONS AND CONDITIONS AFFECTING THE WORK WITH THE ACTUAL CONDITIONS AT THE JOB SITE. IN ADDITION, THE CONTRACTOR MUST VERIFY THE ENGINEER'S LINE AND GRADE STAKES. IF THERE ARE ANY DISCREPANCIES WITH WHAT IS SHOWN ON THE CONSTRUCTION PLANS, HE MUST IMMEDIATELY REPORT SAME TO ENGINEER BEFORE DOING ANY WORK. OTHERWISE THE CONTRACTOR ASSUMES FULL RESPONSIBILITY. IN THE EVENT OF DISAGREEMENT BETWEEN THE CONSTRUCTION PLANS, SPECIFICATIONS AND/OR SPECIAL DETAILS, THE CONTRACTOR SHALL SECURE WRITTEN INSTRUCTION FROM THE ENGINEER PRIOR TO PROCEEDING WITH ANY PART OF THE WORK AFFECTED BY DIMENSIONS OR DISCREPANCIES. FAILING TO SECURE SUCH INSTRUCTION, THE CONTRACTOR WILL BE CONSIDERED TO HAVE PROCEEDED AT HIS OWN RISK AND EXPENSE. IN THE EVENT OF ANY DOUBT OR QUESTIONS ARISING WITH RESPECT TO THE TRUE MEANING OF THE CONSTRUCTION PLANS OR SPECIFICATIONS, THE DECISION OF THE ENGINEER SHALL BE FINAL AND CONCLUSIVE.
6. NOTIFICATION OF COMMENCING CONSTRUCTION

   A. THE CONTRACTOR SHALL NOTIFY THE OWNER AND/OR HIS REPRESENTATIVE AND THE AFFECTED GOVERNMENTAL AGENCIES IN WRITING AT LEAST THREE FULL WORKING DAYS PRIOR TO COMMENCEMENT OF CONSTRUCTION. IN ADDITION, THE CONTRACTOR SHALL NOTIFY AS NECESSARY, ALL TESTING AGENCIES, EITHER MUNICIPALITY'S OR THE OWNER'S, SUFFICIENTLY IN ADVANCE OF CONSTRUCTION

   B. FAILURE OF CONTRACTOR TO ALLOW PROPER NOTIFICATION TIME WHICH RESULTS IN TESTING COMPANIES TO BE UNABLE TO VISIT SITE AND PERFORM TESTING WILL CAUSE CONTRACTOR TO SUSPEND OPERATION (PERTAINING TO TESTING) UNTIL TESTING AGENCY CAN SCHEDULE TESTING OPERATIONS. COST OF SUSPENSION OF WORK TO BE BORNE BY CONTRACTOR.
7. ALL CONTRACTORS SHALL KEEP ACCESS AVAILABLE AT ALL TIMES FOR ALL TYPES OF TRAFFIC. AT NO TIME SHALL ACCESS BE DENIED TO PROPERTIES SURROUNDING THE SITE.
8. ALL PROPOSED ELEVATIONS SHOWN ON THE PLANS ARE FINISHED SURFACE ELEVATIONS, UNLESS OTHERWISE SPECIFIED.
9. THE CONTRACTOR SHALL PRESERVE ALL CONSTRUCTION STAKES UNTIL THEY ARE NO LONGER NEEDED. ANY STAKES DESTROYED OR DISTURBED BY THE CONTRACTOR PRIOR TO THEIR USE SHALL BE RESET BY THE DEVELOPER'S ENGINEER AT CONTRACTOR'S COST.
10. ALL FRAMES AND LIDS FOR STORM AND SANITARY SEWER STRUCTURES ARE TO BE ADJUSTED TO MEET FINAL FINISH GRADE. THIS ADJUSTMENT IS TO BE MADE BY THE SEWER CONTRACTOR AND THE COST TO BE INCLUDED IN THE INCIDENTAL ITEMS. THESE ADJUSTMENTS TO FINISHED GRADE WILL NOT ALLEVIATE THE CONTRACTOR FROM ANY ADDITIONAL ADJUSTMENTS AS REQUIRED BY THE GOVERNING REVIEW AGENCY. (ERA) UPON FINAL INSPECTION OF THE PROJECT. FINAL GRADES TO BE DETERMINED BY THE ERA AT THE TIME OF FINAL INSPECTION AND MAY VARY FROM PLAN GRADE.
11. ANY EXISTING SIGNS, LIGHT STANDARDS AND UTILITY POLES WHICH INTERFERE WITH CONSTRUCTION OPERATIONS AND NOT NOTED FOR DISPOSAL SHALL BE REMOVED AND RESET BY THE CONTRACTOR AT HIS OWN EXPENSE AS DIRECTED BY THE ENGINEER. ANY DAMAGE TO THESE ITEMS SHALL BE REPAIRED OR REPLACED BY THE CONTRACTOR AT HIS OWN EXPENSE TO THE SATISFACTION OF THE OWNER. ANY SIGNS NOT REQUIRED TO BE RESET, SHALL BE DELIVERED TO THE RESPECTIVE OWNERS.
12. REMOVAL OF SPECIFIED ITEMS, INCLUDING BUT NOT LIMITED TO, PAVEMENT, SIDEWALK, CURB, CURB AND GUTTER, CULVERTS, ETC. SHALL BE DISPOSED OF OFF-SITE BY THE CONTRACTOR AT HIS OWN EXPENSE. HE IS RESPONSIBLE FOR ANY PERMIT REQUIRED FOR SUCH DISPOSAL.
13. ALL FIELD TILE ENCOUNTERED DURING CONSTRUCTION OPERATIONS SHALL BE CONNECTED TO THE PROPOSED STORM SEWER SYSTEM OR SHALL BE RESTORED TO PROPER DRAINAGE CONDITION. A RECORD OF THE LOCATION OF ALL FIELD TILE THAT WERE ENCOUNTERED SHALL BE KEPT BY THE CONTRACTOR AND TURNED OVER TO THE ENGINEER UPON COMPLETION OF THE PROJECT. THE COST OF THIS WORK SHALL BE CONSIDERED AS INCIDENTAL TO THE CONTRACT AND NO ADDITIONAL COMPENSATION WILL BE ALLOWED BY OWNER & MUNICIPALITY.
14. ALL WORK PERFORMED UNDER THIS CONTRACT SHALL BE GUARANTEED BY THE CONTRACTOR AND HIS SURETY FOR A PERIOD OF 12 MONTHS FROM THE DATE OF FINAL ACCEPTANCE OF THE PROJECT AND THE CONTRACTOR SHALL BE HELD RESPONSIBLE FOR ALL DEFECTS IN MATERIALS AND WORKMANSHIP OF WHATEVER NATURE DURING THAT PERIOD.
15. BEFORE ACCEPTANCE BY THE OWNER AND FINAL PAYMENT, ALL WORK SHALL BE INSPECTED BY THE OWNER OR HIS REPRESENTATIVE. FINAL PAYMENT WILL BE MADE AFTER ALL THE CONTRACTOR'S WORK HAS BEEN APPROVED AND ACCEPTED.
16. UPON AWARDING OF THE CONTRACT AND WHEN REQUIRED BY THE MUNICIPALITY, THE CONTRACTOR SHALL FURNISH A LABOR, MATERIAL AND PERFORMANCE BOND & INSURANCE IN THE AMOUNT REQUIRED BY THE MUNICIPALITY GUARANTEEING COMPLETION OF THE WORK. THE UNDERWRITER SHALL BE ACCEPTABLE TO THE MUNICIPALITY.
17. EASEMENTS FOR THE EXISTING UTILITIES, BOTH PUBLIC AND PRIVATE, AND UTILITIES WITHIN PUBLIC RIGHTS-OF-WAY ARE SHOWN ON THE PLANS ACCORDING TO AVAILABLE RECORDS. THE CONTRACTOR SHALL BE RESPONSIBLE FOR DETERMINING THE EXACT LOCATION IN THE FIELD OF THESE UTILITY LINES AND THEIR PROTECTION FROM DAMAGE DUE TO CONSTRUCTION OPERATIONS. IF EXISTING UTILITY LINES OF ANY NATURE ARE ENCOUNTERED WHICH CONFLICT WITH LOCATIONS OF THE NEW CONSTRUCTION, ADVANTAGE CONSULTING ENGINEERS IS RESPONSIBLE TO RESOLVE THE CONFLICT. ADVANTAGE CONSULTING ENGINEERS IS NOT RESPONSIBLE FOR THE COST OF CONSTRUCTION
18. OWNER SHALL OBTAIN EASEMENTS AND PERMITS NECESSARY TO FACILITATE CONSTRUCTION OF THE PROPOSED UTILITIES. THE CONTRACTOR, HOWEVER, SHALL FURNISH ALL REQUIRED BONDS AND EVIDENCE OF INSURANCE NECESSARY TO SECURE THESE PERMITS
19. THE CONTRACTORS SHALL PLAN THEIR WORK BASED ON THEIR OWN BORINGS, EXPLORATIONS AND OBSERVATIONS TO DETERMINE SOIL CONDITIONS AT THE LOCATION OF THE PROPOSED WORK
20. THE CONTRACTOR IS SOLELY RESPONSIBLE FOR SAFETY ON THE JOB IN ACCORDANCE WITH OSHA REGULATIONS.
21. THE CONTRACTOR SHALL COLLECT AND REMOVE ALL CONSTRUCTION DEBRIS, EXCESS MATERIALS, TRASH, OIL AND GREASE RESIDUE, MACHINERY, TOOLS AND OTHER MISCELLANEOUS ITEMS WHICH WERE NOT PRESENT PRIOR TO PROJECT COMMENCEMENT AT NO ADDITIONAL EXPENSE TO THE OWNER. THE CONTRACTOR SHALL BE RESPONSIBLE FOR ACQUIRING ANY AND ALL PERMITS NECESSARY FOR THE HAULING AND DISPOSAL REQUIRED FOR CLEAN-UP AS DIRECTED BY THE ENGINEER OR OWNER. BURNING ON THE SITE IS NOT PERMITTED.
22. IT SHALL BE CONTRACTOR'S SOLE RESPONSIBILITY TO PROVIDE PROPER BARRICADING, WARNING DEVICES AND THE SAFE MANAGEMENT OF TRAFFIC WITHIN THE AREA OF CONSTRUCTION. ALL SUCH DEVICES AND THEIR INSTALLATION SHALL CONFORM TO THE ILLINOIS MANUAL OF UNIFORM TRAFFIC CONTROL DEVICES FOR STREET AND HIGHWAYS, LATEST EDITION AND IN CONFORMANCE WITH REGULATIONS OF THE ERA.
23. NO UNDERGROUND WORK SHALL BE COVERED UNTIL IT HAS BEEN APPROVED BY THE ERA. APPROVAL TO PROCEED MUST BE OBTAINED FROM THE ERA PRIOR TO INSTALLING PAVEMENT BASE, BINDER, SURFACE AND PRIOR TO POURING ANY CONCRETE AFTER FORMS HAVE BEEN SET.
24. ALL EXISTING UTILITIES OR IMPROVEMENTS, INCLUDING WALKS, CURBS, PAVEMENT AND PARKWAYS DAMAGED OR REMOVED DURING CONSTRUCTION SHALL BE PROMPTLY RESTORED TO THEIR RESPECTIVE ORIGINAL CONDITION.
25. AT THE CLOSE OF EACH WORKING DAY AND AT THE CONCLUSION OF CONSTRUCTION OPERATIONS, ALL DRAINAGE STRUCTURES AND FLOW LINES SHALL BE FREE FROM DIRT AND DEBRIS.
26. TREES NOT MARKED FOR REMOVAL SHALL BE CONSIDERED AS DESIGNATED TO BE SAVED AND SHALL BE PROTECTED UNDER THE PROVISIONS OF ARTICLE 201.05 OF THE STANDARD SPECIFICATIONS.

27. LIMB PRUNING SHALL BE PERFORMED UNDER THE SUPERVISION OF AN APPROVED LANDSCAPE ARCHITECT AND SHALL BE UNDERTAKEN IN A TIMELY FASHION SO AS NOT TO INTERFERE WITH CONSTRUCTION.
28. ALL LIMBS, BRANCHES, AND OTHER DEBRIS RESULTING FROM THIS WORK SHALL BE DISPOSED OF OFF-SITE BY THE CONTRACTOR AT HIS OWN EXPENSE.
29. ALL CUTS OVER 1" IN DIAMETER SHALL BE MADE FLUSH WITH THE NEXT LARGE BRANCH. WOUNDS OVER 1" IN DIAMETER SHALL BE PAINTED WITH AN APPROVED TREE PAINT.
30. ANY DEWATERING OF SEWER AND WATER TRENCHES AS WELL AS TEMPORARY SHEETING OR BRACING THAT MAY BE REQUIRED SHALL BE THE RESPONSIBILITY OF THE CONTRACTOR AND SHALL NOT BE CONSIDERED EXTRA WORK. IN THE EVENT THAT SOFT MATERIALS WITH UNCONFINED COMPRESSIVE STRENGTH LESS THAN 0.5 TSF ARE ENCOUNTERED IN SEWER AND WATER MAIN CONSTRUCTION, THE CONTRACTOR SHALL (UPON APPROVAL OF THE OWNER AND/OR ENGINEER) OVER-EXCAVATE TO A DEPTH OF AT LEAST ONE (1) FOOT BELOW THE BOTTOM OF THE PIPE AND BACKFILL WITH COMPACTED CRUSHED STONE. PROPERLY FORMED TO FIT THE BOTTOM OF THE PIPE.
31. CONTRACTOR SHALL VIDEO TAPE WORK AREA PRIOR TO CONSTRUCTION FOR THE PURPOSE OF DOCUMENTING EXISTING CONDITIONS.
32. TRENCH BACKFILL WILL BE REQUIRED TO THE FULL DEPTH ABOVE ALL UNDERGROUND UTILITIES WITHIN TWO FEET OF PROPOSED OR EXISTING PAVEMENTS, UTILITIES, BUILDINGS, AND SIDEWALKS. THE TRENCH BACKFILL SHALL BE DONE IN ACCORDANCE WITH IDOT STANDARD SPECIFICATIONS. THE TRENCH BACKFILL AND BEDDING MATERIAL SHALL CONSIST OF CRUSHED GRAVEL CONFORMING TO IDOT GRADATION CA-6.
33. WHERE SHOWN ON THE PLANS OR AS DIRECTED BY THE ENGINEER, EXISTING DRAINAGE STRUCTURES AND SYSTEMS SHALL BE CLEANED OF DEBRIS AND PATCHED AS NECESSARY TO ASSURE INTEGRITY OF THE STRUCTURE. THIS WORK WILL BE PAID FOR AT THE CONTRACT UNIT PRICE EACH FOR STRUCTURES AND CONTRACT UNIT PRICE PER LINEAL FOOT FOR STORM SEWERS, WHICH SHALL BE PAYMENT IN FULL FOR CLEANING, PATCHING, REMOVAL AND DISPOSAL OF DEBRIS AND DIRT. DRAINAGE STRUCTURES AND SEWERS CONSTRUCTED AS PART OF THIS CONTRACT SHALL BE MAINTAINED BY THE CONTRACTOR AT HIS OWN EXPENSE.
34. HYDRANTS SHALL NOT BE PLUMBED DIRECTLY ON THE ROAD SUBGRADES WHEREVER POSSIBLE. HOSES SHALL BE USED TO DIRECT THE WATER INTO STORM SEWERS. DAMAGE TO THE ROAD SUBGRADE OR LOT AREAS DUE TO EXCESSIVE WATER SATURATION AND/OR EROSION FROM HYDRANT FLUSHING OR FROM LEAKS IN THE WATER DISTRIBUTION SYSTEM, WILL BE THE RESPONSIBILITY OF THE CONTRACTOR. FLUSHING OR USING HYDRANT TO MAKE ALL NECESSARY REPAIRS AT HIS EXPENSE. THE CONTRACTOR SHALL PROVIDE ALL CONSTRUCTION WATER AT HIS EXPENSE.
35. AFTER THE STORM SEWER SYSTEM HAS BEEN CONSTRUCTED THE CONTRACTOR SHALL PLACE EROSION CONTROL AT LOCATIONS SHOWN ON THE PLANS OR AS SELECTED IN THE FIELD BY THE ENGINEER. THE PURPOSE OF THE EROSION CONTROL WILL BE TO MINIMIZE THE AMOUNT OF SEDIMENT, WHICH NORMALLY WOULD ENTER THE STORM SEWER SYSTEM FROM ADJACENT AND/OR UPSTREAM DRAINAGE AREAS.
36. EROSION CONTROL MEASURES SHALL BE INSTALLED IN ACCORDANCE WITH ILLINOIS URBAN MANUAL, AND SHALL BE MAINTAINED BY THE CONTRACTOR AND SHALL REMAIN IN PLACE UNTIL A SUITABLE GROWTH OF GRASS ACCEPTABLE TO THE ENGINEER HAS BEEN DEVELOPED.
37. THE ENGINEER SHALL PROVIDE ONE MYLAR AND REQUIRED BLUELINE SETS OF "RECORD DRAWINGS" TO THE ERA AND OWNER PRIOR TO ANY REQUEST FOR FINAL INSPECTION. SAID PLANS SHALL INDICATE THE FINAL LOCATION AND LAYOUT OF ALL IMPROVEMENTS, INCLUDE VERIFICATION OF ALL BUILDING PADS, TOP OF FOUNDATION, INVERT, RIM, AND SPOT GRADE ELEVATIONS, LOCATION OF ALL WATER SERVICE B-BOXES, SANITARY SERVICES, AND STORM SERVICES AND INCORPORATE ALL FIELD DESIGN CHANGES APPROVED BY THE ERA. HOWEVER THE CONTRACTOR SHALL PROVIDE ALL SERVICE INFORMATION REQUIRED BY THE ERA TO COMPLETE THE RECORD DRAWINGS.

EARTHWORK

1. TOPSOIL EXCAVATION

EXCAVATION OF TOPSOIL AND OTHER STRUCTURALLY UNSUITABLE MATERIALS WITHIN THOSE AREAS THAT WILL REQUIRE EARTH EXCAVATION BELOW STRUCTURALLY UNSUITABLE MATERIALS OR COMPACTED EARTH FILL MATERIAL AND CUT AREAS OF THE NON-STRUCTURAL ZONES. TOPSOIL MAY NOT HAVE TO BE REMOVED IF FILL IS TO BE PLACED IN NON-STRUCTURAL FILL AREAS SUCH AS REAR YARDS.

PLACEMENT OF EXCAVATED MATERIAL FOR FUTURE USE WITHIN AREAS TO BE LANDSCAPED, AND FILL IN THE AREAS NOT REQUIRING STRUCTURAL FILL ARE TO BE APPROVED BY OWNER PRIOR TO PLACEMENT.

EXCESS MATERIALS, IF NOT UTILIZED AS FILL OR IF NOT TO BE STOCKPILED FOR FUTURE LANDSCAPING, SHALL BE COMPLETELY REMOVED FROM THE CONSTRUCTION SITE AND DISPOSED OF OFF-SITE BY THE CONTRACTOR.

TOPSOIL RESPREAD SHALL INCLUDE HAULING AND SPREADING A MINIMUM OF 6" OF TOPSOIL OVER AREAS TO BE LANDSCAPED WHERE SHOWN ON THE PLANS OR DIRECTED BY THE ENGINEER.

MODERATE COMPACTION IS REQUIRED IN NON-STRUCTURAL FILL AREAS.

2. EARTH EXCAVATION

EXCAVATION OF EARTH AND OTHER MATERIALS WHICH ARE SUITABLE FOR USE AS STRUCTURAL FILL. THE EXCAVATION SHALL BE TO WITHIN A TOLERANCE OF 0.1 FEET +/- OF THE PLAN SUBGRADE ELEVATIONS. THE +/- TOLERANCE WITHIN PAVEMENT AREAS SHALL BE SUCH THAT THE EARTH MATERIALS SHALL "BALANCE" AS PART OF THE FINE GRADING OPERATION.

PLACEMENT OF THE EARTH AND OTHER SUITABLE MATERIALS SHALL BE WITHIN THOSE AREAS REQUIRING STRUCTURAL FILL IN ORDER TO ACHIEVE THE PLAN SUBGRADE ELEVATIONS TO WITHIN A TOLERANCE OF 0.1 FEET +/-. THE FILL MATERIAL SHALL BE PLACED IN LOOSE LIFTS THAT SHALL NOT EXCEED EIGHT (8) INCHES IN THICKNESS, AND THE WATER CONTENT SHALL BE ADJUSTED IN ORDER TO ACHIEVE REQUIRED COMPACTION. EARTH MATERIAL MAY BE PLACED WITHIN THOSE PORTIONS OF THE SITE NOT REQUIRING STRUCTURAL FILL, TO WITHIN PLAN SUBGRADE ELEVATION. IN AREAS REQUIRING STRUCTURAL FILL, HOWEVER, THE EARTH MATERIAL SHALL NOT BE PLACED OVER TOPSOIL OR OTHER UNSUITABLE MATERIALS. THE STRUCTURAL SUBGRADE AREA SHALL EXTEND TO THE ZONE OF INFLUENCE IN ALL FILL AREAS.

COMPACTION OF THE EARTH AND OTHER SUITABLE MATERIALS, SHALL BE TO AT LEAST 95% OF THE MODIFIED PROCTOR DRY DENSITY WITHIN PROPOSED PAVEMENT AND BUILDING PAD AREAS, SIDEWALK, ETC., 90% TO 95% OF THE MODIFIED PROCTOR DRY DENSITY IS REQUIRED IN NON-STRUCTURAL FILL AREAS.

THE CONTRACTOR SHALL USE CARE IN GRADING NEAR TREES, SHRUBS, AND BUSHES WHICH ARE TO REMAIN SO AS NOT TO CAUSE INJURY TO ROOTS OR TRUNKS.

THE CONTRACTOR SHALL USE CARE IN GRADING OR EXCAVATING NEAR ALL EXISTING ITEMS WHICH ARE TO BE REMAIN. ANY DAMAGE DONE TO THESE EXISTING ITEMS BY THE CONTRACTOR'S OPERATIONS SHALL BE REPAIRED AT HIS OWN EXPENSE.

3. UNSUITABLE MATERIAL

UNSUITABLE MATERIAL SHALL BE CONSIDERED AS MATERIAL WHICH IS NOT SUITABLE FOR THE SUPPORT OF PAVEMENT OR BUILDING CONSTRUCTION, AND IS IT IS ENCOUNTERED BELOW NORMAL TOPSOIL DEPTHS AND THE PROPOSED SUBGRADE ELEVATION IT SHALL BE REMOVED AND REPLACED WITH SELECT CONVENIENT MATERIAL APPROVED BY THE SOILS ENGINEER. THE DECISION TO REMOVE SAID MATERIAL, AND TO WHAT EXTENT, SHALL BE MADE BY A SOILS ENGINEER WITH THE CONCURRENCE OF THE OWNER.

4. THE GRADING CONTRACTOR SHALL:

MAINTAIN POSITIVE DRAINAGE AT ALL TIMES DURING THE COURSE OF CONSTRUCTION, AND PREVENT STORM WATER FROM RUNNING INTO OR STANDING IN EXCAVATED AREAS.

SPREAD AND COMPACT UNIFORMLY TO THE DEGREE SPECIFIED FOR ALL EXCESS TRENCH SPOIL AFTER COMPLETION OF THE UNDERGROUND IMPROVEMENTS.

SCARIFY AND COMPACT TO THE DEGREE SPECIFIED THE UPPER TWELVE (12) INCHES OF THE SUITABLE SUBGRADE MATERIAL, IN ALL AREAS THAT MAY BE SOFT DUE TO EXCESS MOISTURE CONTENT. THIS APPLIES TO CUT AREAS AS WELL AS FILL AREAS.

PROVIDE WATER AS DIRECTED BY SOILS ENGINEER TO DRY MATERIAL TO ADJUST THE MOISTURE CONTENT FOR THE PURPOSE OF ACHIEVING THE SPECIFIED COMPACTION.

BACKFILL THE CURB AND GUTTER AFTER ITS CONSTRUCTION AND PRIOR TO THE PLACEMENT OF THE BASE COURSE MATERIAL.

BE RESPONSIBLE FOR IMPLEMENTATION OF THE "SOIL EROSION AND SEDIMENTATION CONTROL MEASURES" AS DESCRIBED IN THESE PLANS. ALL CONTRACTORS SHALL COMPLY WITH SWPPP AND NPDES REQUIREMENTS.

USE LIME STABILIZATION IN THE SUBGRADE MATERIAL IF REQUIRED BY THE SOILS ENGINEER.

5. TESTING AND FINAL ACCEPTANCE

THE CONTRACTOR SHALL PROVIDE AS A MINIMUM, A TANDEM AXLE TRUCK (LOADED TO 14 TONS FOR PROOF ROLLING THE PAVEMENT SUBGRADE PRIOR TO THE PLACEMENT OF THE CURB AND GUTTER AND THE BASE MATERIAL. THIS SHALL BE WITNESSED AND APPROVED BY ERA REPRESENTATIVE AND OWNER.

ANY UNSUITABLE AREA ENCOUNTERED AS A RESULT OF PROOF ROLLING SHALL BE REMOVED AND REPLACED WITH SUITABLE MATERIAL APPROVED BY THE SOILS CONSULTANT, AND PROOF ROLLING SHALL BE PERFORMED UNTIL THE SUBGRADE IS APPROVED BY THE ERA REPRESENTATIVE AND OWNER.

THE WORK AREAS SHALL BE POSITIVELY DRAINED DURING CONSTRUCTION. FINAL GRADES SHALL BE PROTECTED AGAINST DAMAGE FROM EROSION, SEDIMENTATION AND TRAFFIC.

6. DRAIN TILES

ANY DRAIN TILES ENCOUNTERED SHALL BE MARKED. ANY DRAIN TILES THAT ARE DAMAGED SHALL BE REPAIRED OR ROUTED FOR POSITIVE DRAINAGE TO AVOID ANY POTENTIAL DRAINAGE ISSUE FOR THE UPSTREAM PROPERTY OWNERS

SOIL EROSION AND SEDIMENT CONTROL

LAKE COUNTY STORMWATER MANAGEMENT COMMISSION
SOIL EROSION AND SEDIMENT CONTROL CONSTRUCTION NOTES

A. SEDIMENT CONTROL MEASURES SHALL BE INSTALLED PRIOR TO THE COMMENCEMENT OF HYDROLOGIC DISTURBANCE OF UPLAND AREAS.

B. FOR THOSE DEVELOPMENTS THAT REQUIRE A DESIGNATED EROSION CONTROL INSPECTOR (DECI), INSPECTIONS AND DOCUMENTATION SHALL BE PERFORMED, AT A MINIMUM:

UPON COMPLETION OF SEDIMENT AND RUNOFF CONTROL MEASURES (INCLUDING PERIMETER CONTROLS AND DIVERSIONS), PRIOR TO PROCEEDING WITH ANY OTHER EARTH DISTURBANCE OR GRADING.

AFTER EVERY SEVEN (7) CALENDAR DAYS OR STORM EVENT WITH GREATER THAN 0.5 INCH OF RAINFALL OR LIQUID EQUIVALENT PRECIPITATION.

C. SOIL DISTURBANCE SHALL BE CONDUCTED IN SUCH A MANNER AS TO MINIMIZE EROSION. IF STRIPPING, CLEARING, GRADING, OR LANDSCAPING ARE TO BE DONE IN PHASES, THE PERMITTEE SHALL PLAN FOR APPROPRIATE SOIL EROSION AND SEDIMENT CONTROL MEASURES.

D. A STABILIZED MAT OF CRUSHED STONE MEETING IDOT GRADATION CA7 UNDERLAIN WITH FILTER FABRIC AND IN ACCORDANCE WITH THE ILLINOIS URBAN MANUAL, OR OTHER APPROPRIATE MEASURE(S) AS APPROVED BY THE ENFORCEMENT OFFICER, SHALL BE INSTALLED AT ANY POINT WHERE TRAFFIC WILL BE ENTERING OR LEAVING A CONSTRUCTION SITE, SEDIMENT OR SOIL REACHING AN IMPROVED PUBLIC RIGHT-OF-WAY, STREET, ALLEY OR PARKING AREA SHALL BE REMOVED BY SCRAPING OR STREET CLEANING AS ACCUMULATIONS WARRANT AND TRANSPORTED TO A CONTROLLED SEDIMENT DISPOSAL AREA.

E. TEMPORARY DIVERSIONS SHALL BE CONSTRUCTED AS NECESSARY TO DIRECT ALL RUNOFF FROM HYDROLOGICALLY DISTURBED AREAS TO AN APPROPRIATE SEDIMENT TRAP OR BASIN.

F. DISTURBED AREAS SHALL BE STABILIZED WITH TEMPORARY OR PERMANENT MEASURES WITHIN SEVEN (7) CALENDAR DAYS FOLLOWING THE END OF ACTIVE HYDROLOGIC DISTURBANCE OR REDISTURBANCE.

G. ALL STOCKPILES SHALL HAVE APPROPRIATE MEASURES TO PREVENT EROSION. STOCKPILES SHALL NOT BE PLACED IN FLOOD PRONE AREAS OR WETLANDS AND DESIGNATED BUFFERS.

H. SLOPES STEEPER THAN 3H:1V SHALL BE STABILIZED WITH APPROPRIATE MEASURESAS APPROVED BY THE ENFORCEMENT OFFICER.

I. APPROPRIATE EROSION CONTROL BLANKET SHALL BE INSTALLED ON ALL INTERIOR DETENTION BASIN SIDE SLOPES BETWEEN THE NORMAL WATER LEVEL AND HIGH WATER LEVEL.

J. STORM SEWERS THAT ARE OR WILL BE FUNCTIONING DURING CONSTRUCTION SHALL BE PROTECTED BY AN APPROPRIATE SEDIMENT CONTROL MEASURE.

K. IF DEWATERING SERVICES ARE USED, ADJOINING PROPERTIES AND DISCHARGE LOCATIONS SHALL BE PROTECTED FROM EROSION AND SEDIMENTATION. DISCHARGES SHALL BE ROUTED THROUGH AN APPROVED ANIONIC POLYMER DEWATERING SYSTEM OR A SIMILAR MEASURE AS APPROVED BY THE ENFORCEMENT OFFICER. DEWATERING SYSTEMS SHOULD BE INSPECTED DAILY DURING OPERATIONAL PERIODS. THE ENFORCEMENT OFFICER, OR APPROVED REPRESENTATIVE, MUST BE PRESENT AT THE COMMENCEMENT OF DEWATERING ACTIVITIES.

L. IF INSTALLED SOIL EROSION AND SEDIMENT CONTROL MEASURES DO NOT MINIMIZE SEDIMENT LEAVING THE DEVELOPMENT SITE, ADDITIONAL MEASURES SUCH AS ANIONIC POLYMERS OR FILTRATION SYSTEMS MAY BE REQUIRED BY THE ENFORCEMENT OFFICER.

M. ALL TEMPORARY AND PERMANENT EROSION CONTROL MEASURES MUST BE MAINTAINED AND REPAIRED AS NEEDED. THE PROPERTY OWNER SHALL BE ULTIMATELY RESPONSIBLE FOR MAINTENANCE AND REPAIR.

N. ALL TEMPORARY SEDIMENT CONTROL MEASURES SHALL BE REMOVED WITHIN 30 DAYS AFTER FINAL SITE STABILIZATION IS ACHIEVED OR AFTER THE TEMPORARY MEASURES ARE NO LONGER NEEDED.

O. THE EROSION CONTROL MEASURES INDICATED ON THE PLANS ARE THE MINIMUM REQUIREMENTS. ADDITIONAL MEASURES MAY BE REQUIRED, AS DIRECTED BY THE ENGINEER, ENFORCEMENT OFFICER, OR OTHER GOVERNING AGENCY.

SIGNING AND PAVEMENT MARKING

1. ALL SIGNAGE AND PAVEMENT MARKING SHALL BE IN ACCORDANCE WITH THE ILLINOIS MANUAL ON UNIFORM TRAFFIC CONTROL DEVICES (MUTCD), THE STANDARD SPECIFICATIONS FOR ROAD AND BRIDGE CONSTRUCTION (SSRBC), MUNICIPAL CODE AND THESE PLANS.
2. CONTRACTOR SHALL ESTABLISH LOCATION OF ALL SIGNS AND MARKINGS FOR APPROVAL BY THE OWNER PRIOR TO INSTALLATION.
3. SIGNS: SIGNS SHALL BE CONSTRUCTED OF 0.080 INCH THICK FLAT ALUMINUM PANELS WITH REFLECTORIZED LEGEND ON THE FACE IN ACCORDANCE WITH (SSRBC) SECTION 720. LEGEND SHALL BE IN ACCORDANCE WITH MUTCD AND AS SHOWN ON THE PLANS.
4. POSTS: SIGN POSTS SHALL BE A HEAVY DUTY STEEL "U" SHAPED CHANNEL WEIGHING 3.0 POUNDS/FOOT SUCH AS A TYPE B METAL POST PER (SSRBC) SECTION 729. [OR 2" PERFORATED STEEL TUBE PER (SSRBC) SECTION 728].
5. SIGNS AND POSTS SHALL BE INSTALLED IN ACCORDANCE WITH THE ABOVE (SSRBC) SECTIONS AND IDOT STANDARD 729001 EXCEPT AS MODIFIED BY THE PLANS.
6. PAVEMENT MARKINGS: ALL PAVEMENT MARKINGS IN THE ROADWAY LANES, SUCH AS STOP LINES, CENTERLINES, CROSSWALKS AND DIRECTIONAL ARROWS SHALL BE PAINT PER SSRBC, EXCEPT AS MODIFIED BY THE PLANS.
7. PAVEMENT MARKINGS ON BIKE PATHS, PARKING LOT STALLS, AND SIMILAR "LOW WEAR" APPLICATION, SHALL BE PAINT IN ACCORDANCE TO (SSRBC) SECTION 780, EXCEPT AS MODIFIED BY THE PLANS. REFLECTIVE BEADS ARE NOT REQUIRED.
8. COLOR, WIDTH, STYLE, AND SIZE OF ALL MARKINGS SHALL BE IN ACCORDANCE WITH (MUTCD) EXCEPT AS MODIFIED BY THE PLANS.
9. THERMOPLASTIC MARKINGS SHALL BE INSTALLED WHEN THE PAVEMENT TEMPERATURE IS 50° F AND RISING. PAINT MARKINGS MAY BE INSTALLED WHEN THE AIR TEMPERATURE IS 50° F AND RISING.

WATER MAIN

1. WATER MAINS SHALL BE CONSTRUCTED OF DUCTILE IRON PIPE, CLASS 52. PIPE CONFORMING TO AWWA C-151 (ANSI A-21.51) WITH CEMENT MORTAR LINING AND BITUMINOUS SEAL COATING CONFORMING TO ANSI-A-21.4 (AWWA C-104). ALL WATER MAIN SHALL BE POLYETHYLENE ENCASED. THE POLYETHYLENE MATERIAL SHALL BE IN CONFORMANCE 28 MILLIMETER POLY WRAP MINIMUM OR WITH THE MUNICIPAL REGULATIONS.
2. THE JOINTS SHALL BE PUSH-ON JOINTS CONFORMING TO ANSI A-21.11 (AWWA C-111) AND ALL RETAINING GLANDS SHALL BE SET SEGRIM OR MEGA-LUG TYPE. WATER MAIN FITTINGS SHALL BE OF DUCTILE IRON WITH CEMENT MORTAR LINING(COMPLY WITH ANSI A21.4 OR AWWA C205, STANDARD THICKNESS) AND SEAL COATING (AS SPECIFIED FOR GENERAL USE AND ANSI A21.51 OR ASPHALT COATING PER AWWA C-151) WITH PUSH-ON JOINTS AND SHALL CONFORM TO ANSI A21.10 (AWWA C-110).MECHANICAL JOINTS RETAINER GLANDS SHALL COMPLY WITH ANSI A21.10 OR A21.53.
3. THRUST BLOCKING OR RESTRAINED JOINTS SHALL BE INSTALLED ON ALL WATER MAINS AT ALL BENDS, TEES, ELBO

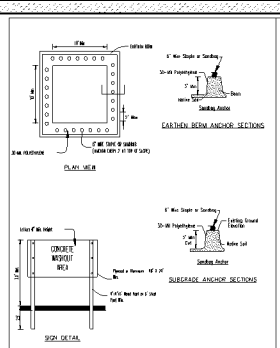

TEMPORARY CONCRETE WASHOUT FACILITY – EARTHEN TYPE

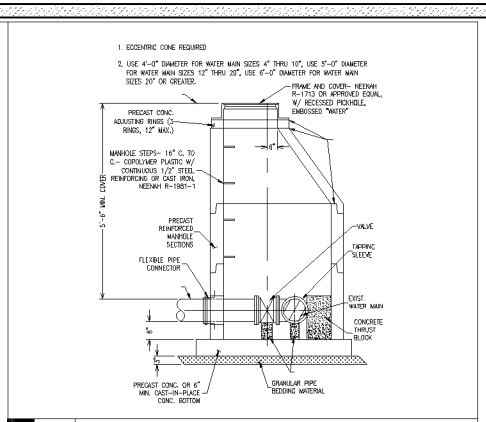

ACE DETAIL — PRESSURE CONNECTION VALVE VAULT DETAIL

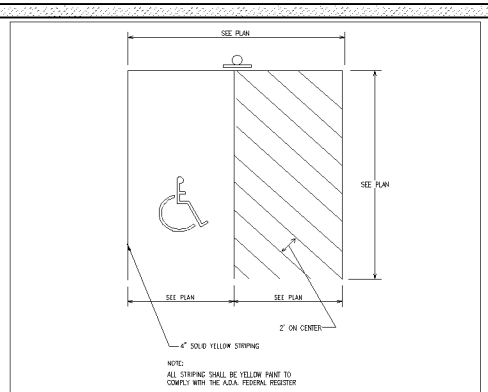

ACE DETAIL — 90° HANDICAPPED PARKING STALL

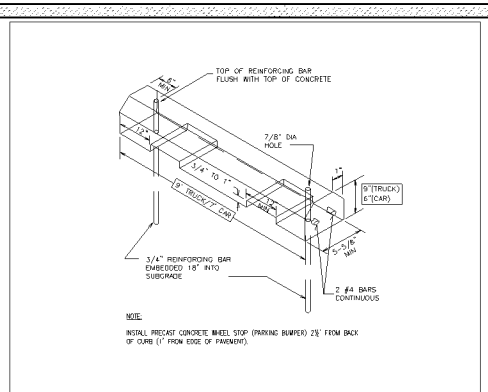

ACE DETAIL — WHEEL STOP (PRECAST CONCRETE) N.T.S.

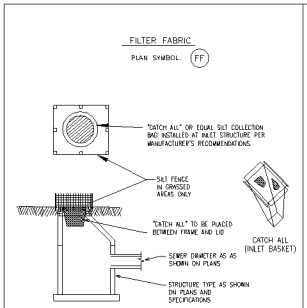

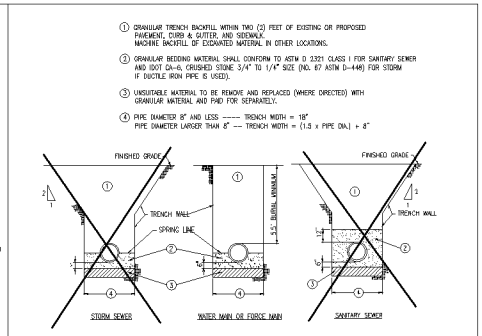

ACE DETAIL — TYPICAL TRENCH CROSS-SECTION DETAILS N.T.S.

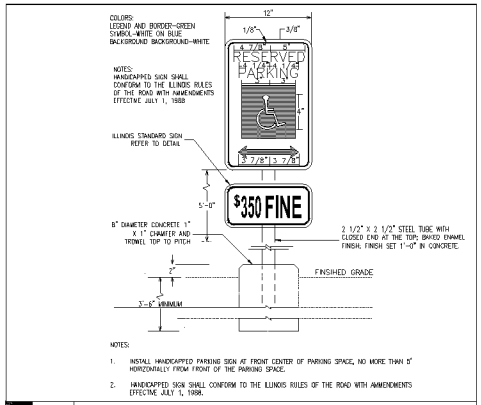

ACE DETAIL — HANDICAP SIGN DETAIL

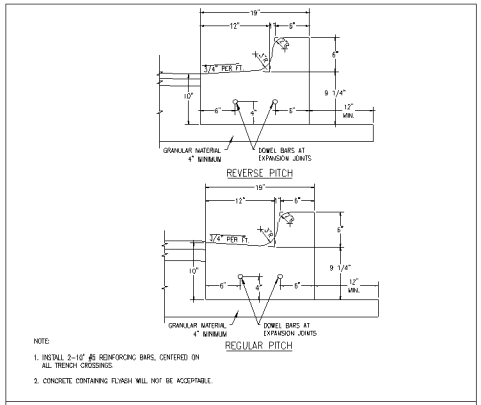

ACE DETAIL — B-6.12 CURB & GUTTER

SILTWORM PERIMETER CONTROL SPECIFICATIONS

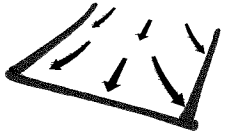

PERIMETER CONTROL:

PLACE SILTWORM DIRECTLY ON TOP OF GRADE, AND OVERLAP ENDS A MINIMUM OF 6". SITE PREPARATION IS MINIMAL, AND THERE IS NO STAKING OR TRENCHING REQUIREMENT FOR GRADES UNDER 12%. ARRANGE THE SILTWORM PERIMETER CONTROL IN A MANNER THAT IS APPLIED PERPENDICULAR TO SHEET FLOW. ENSURE GROUND CONTACT.

SILT FENCE PLAN

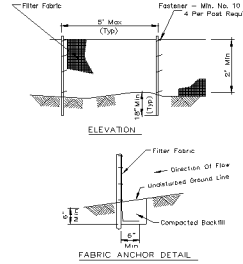

NOTES:
1. Temporary sediment fence shall be installed prior to any grading work in the area to be protected. They shall be maintained throughout the construction period and removed in conjunction with the final grading and site stabilization.
2. Filter fabric shall meet the requirements of material specification 592 Geotextile Table 1 or 2, Class with equivalent opening size of at least 30 for nonwoven and 50 for woven.
3. Fence posts shall be either standard steel post or wood post with a minimum cross-sectional area of 3.0 sq. in.

REFERENCE: Project, Designed, Checked, Approved — Date

NRCS — STANDARD DWG. NO. IL-620 — SHEET 1 OF 2 — DATE 11-20-07

SILT FENCE

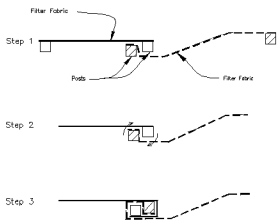

NOTES:
1. Place the end post of the second fence inside the end post of the first fence.
2. Rotate both posts at least 180 degrees in a clockwise direction to create a tight seal with the fabric material.
3. Drive both posts a minimum of 18 inches into the ground and bury the flap.

REFERENCE: Project, Designed, Checked, Approved — Date

NRCS — STANDARD DWG. NO. IL-620(W) — SHEET 2 OF 2 — DATE 1-30-08

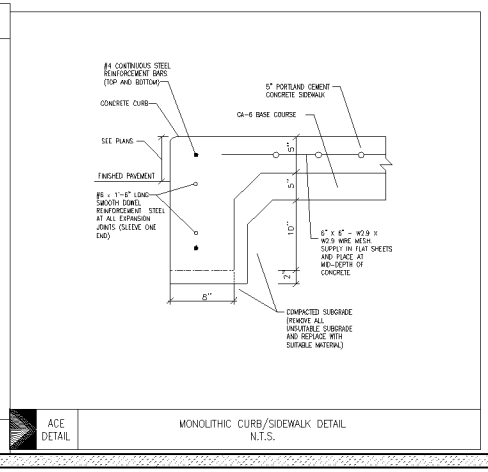

ACE DETAIL — MONOLITHIC CURB/SIDEWALK DETAIL N.T.S.

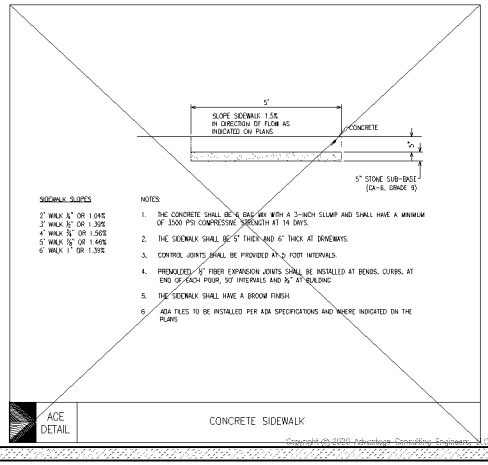

ACE DETAIL — CONCRETE SIDEWALK

Copyright © 2020 Advantage Consulting Engineers

NO.	DATE	REVISED PER VILLAGE	REMARKS
1.	08/10/20		

ADVANTAGE CONSULTING ENGINEERS
801 MAIN STREET, SUITE 17 - LEMONT, ILLINOIS 60439
630.632.0487 www.advantage-ce.com

DETAILS

BUFFALO GROVE ANIMAL HOSPITAL
600 MCHENRY ROAD
BUFFALO GROVE, ILLINOIS

RWE MANAGEMENT COMPANY
16W361 S. FRONTAGE ROAD, SUITE 106
BURR RIDGE, ILLINOIS 60527

JULY 3, 2020
JOB: 20-030

SHEET:
D1

Attachment: 20039-Final-R2 (600 McHenry Road DIA)
Packet Pg. 23

EXHIBIT NO. 401

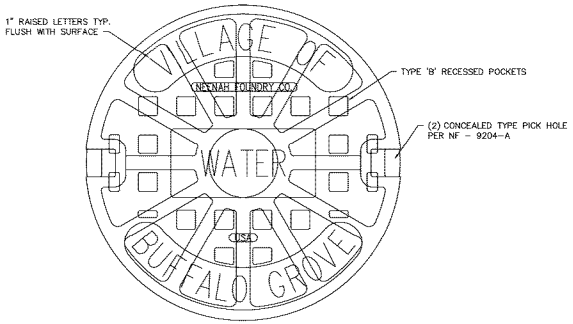

NEENAH FOUNDRY
R–1772 SOLID LID TYPE "B"

CONCEALED PICKHOLE DETAIL

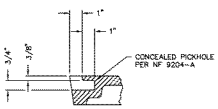

VALVE VAULT LID DETAIL

Prepared by the Village Engineering Division

EXHIBIT NO. 502

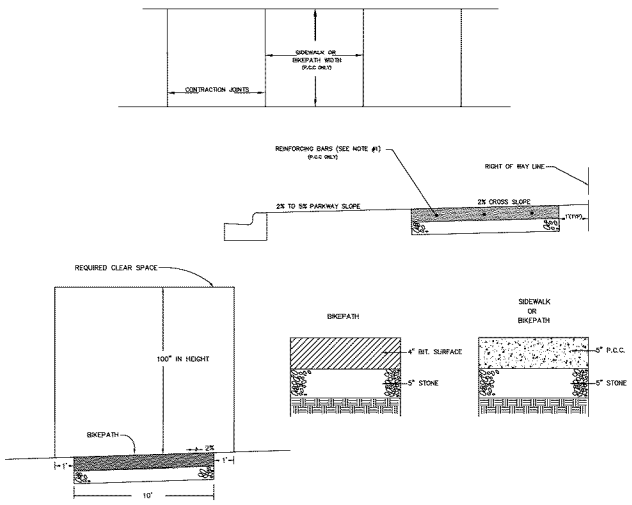

BIKEPATH & SIDEWALK DETAIL

NOTE:

1. AT ALL TRENCH CROSSINGS, 3 – 10' X 3/4" REINFORCING BARS SHALL BE PLACED EQUALLY SPACED AND CENTERED OVER THE TRENCH.
2. CONCRETE THICKNESS SHALL BE 6" AT ALL DRIVEWAYS AND TRENCH CROSSINGS.
3. SET 3/4" EXPANSION JOINTS AT 50' MAX. SPACING INTERVALS.
4. SIDEWALK WIDTH AS SHOWN ON PLANS.
5. CURB RAMPS SHALL COMPLY WITH LATEST ACCESSIBILITY STANDARDS.

Prepared by the Village Engineering Division

EXHIBIT NO.109
MATERIALS LIST

Date of revision: 9/23/19

Water Distribution Material Specifications:

Water main pipe	Ductile Iron Pipe. Pipe class thickness—AWWA C150, minimum thickness, Class 52. Pipe—AWWA C151. Pipe lining—AWWA C104. Fittings—AWWA C153. Joints—mechanical and push-on, AWWA C111. Wrap—4 mil. X-Lam conforming to AWWA C105.A21.5 and AWWA C600. No 90 degree bends allowed. All stainless steel trim.
Valves	American Flow Control, Series 2500 resilient wedge gate valve, All sizes two inch to fourteen inch, counter clockwise to open, AWWA C500., AWWA C504. Clow AWWA C-504 Butterfly Valve for sixteen inch and above. Joint end—mechanical, AWWA C111. All stainless steel trim.
Valve Vault	All structures shall be monolithically precast with designed openings or mechanically cored in the field and shall have rubber boots conforming to ASTM C-923. Dog house vaults are excluded from these requirements when permitted by Village Engineer. Size: For six and eight inch diameter valves, valve vaults shall have a forty-eight inch inside diameter; for pressure connections and valves ten inches and larger in diameter, valve vaults shall have a sixty inch inside diameter. All valve vault cones must be eccentric centers with valve properly aligned.
Castings	Neenah No. R-1772, embossed per Exhibit No. 401.
Fire Hydrant	Waterous Pacer Model WB67-250, AWWA C502, painted fire engine red above ground, with resilient wedge auxiliary gate valve. Nozzles, two at two and one half inch, one at four and one half inch, with threads conforming to National Standard Specifications. Frangible section (breakaway type) with the break line flange located one inch above finished grade. Joint end, six inch, mechanical or push-on. Stainless steel trim below ground. Auxiliary boxes and hydrants shall be a direct flange-to-flange connection.
Fire hydrant extension	Fire hydrant extensions and parts to be manufactured by Waterous only. All stainless steel trim.
Hydrant Valve Box \ Valve boxes	Hydrant Valve Box Tyler 664-S. Lid embossed "WATER." Rubber valve box stabilizer required.
Service Pipe	Copper tube, two inches and smaller, ASTM B88, Type K (1" minimum). Ductile iron, larger than two inches. Conform to Water main section above. Service upgrade for existing water main requires a stainless steel tap repair clamp. Ford model FS1-CC, minimum length 15" long.
Corporation Stop	Mueller H15000, 1" minimum, AWWA C800. 1" Direct tap or 1 1/4" and larger shall use Ford FC202 stainless steel band, epoxy coated saddle.
Curb Stop	Copper service, Mueller H-15154. Ductile iron service, Resilient wedge counter clockwise to open, AWWA C500. Joint end—mechanical, AWWA C111.
Curb box	Copper service, Mueller H-10302. Ductile iron service, conform to Hydrant Valve Box section above. Ductile iron service, 6" and larger, conform to Valve Vault section above.
Copper to Copper Fittings	Mueller Company Model #H-15400. An all flared coupling is required, no sweat joint or compression allowed.
Pressure Connections	Ford FTSS style tapping sleeve. American Flow Control Series 2500 tapping valve four inch minimum. All stainless steel trim.

NO.	DATE	REVISED PER VILLAGE	REMARKS
1.	09/10/20		

ADVANTAGE
CONSULTING ENGINEERS
801 MAIN STREET, SUITE 17 - LEMONT, ILLINOIS 60439
(630) 243-2487 www.acecgroup.com

DETAILS

BUFFALO GROVE ANIMAL HOSPITAL
600 MCHENRY ROAD
BUFFALO GROVE, ILLINOIS

RWE MANAGEMENT COMPANY
16W361 S. FRONTAGE ROAD, SUITE 106
BURR RIDGE, ILLINOIS 60527

JULY 3, 2020
JOB: 20-030

SHEET:
D2
7 OF 7

Attachment: 20039-Final-R2 (600 McHenry Road DIA)

Copyright (C) 2020 Advantage Consulting Engineers, LLC

Animal Care Center of Buffalo Grove
Development Name

DEVELOPMENT IMPROVEMENT AGREEMENT

THIS AGREEMENT ("Agreement"), made and entered into as of this 19th day of January, 2021 by and between the VILLAGE OF BUFFALO GROVE, an Illinois Municipal Corporation, and having its office at Village Hall, 50 Raupp Boulevard, Buffalo Grove, Illinois (hereinafter called "Village"), and RWE Design Build, (hereinafter called "Developer").

WITNESSETH:

WHEREAS, Developer desires to improve the real property described in Exhibit "A" attached hereto and made a part hereof (the "Property"), and in compliance with the Village's Development Ordinance, Developer has submitted to the Village certain (i) plans prepared by Advantage Consulting Engineers, who are registered professional engineers (the "Site Plan"), which Plans were approved by the Village pursuant to Ordinance No. _____ and (ii) additional plans and specifications prepared by Linden Group Inc. dated 12/22/2020 and described in more detail in Exhibit "C" attached hereto and made a part hereof (the "Site Improvement Plans" and together with the Site Plan, the "Plans"); and,

WHEREAS, the Village is willing to approve said Plans, provided that this Agreement is executed to insure the completion of certain site improvements, as a condition precedent to the issuance of building permits for any buildings to be constructed on the Property.

NOW, THEREFORE, it is mutually agreed as follows:

1. Developer shall furnish, or cause to be furnished, at their own cost and expense, all the necessary material, labor, and equipment to complete the improvements listed on Exhibit "B" attached hereto, and all other site improvements not specifically set forth, which are required by applicable ordinances or agreements (collectively, the "Improvements"), all in a good and workmanlike manner and in accordance with all pertinent ordinances and regulations of the Village and in accordance with the Plans (including any subsequent revisions requested by the Developer and approved in writing by the Village pursuant to the Village's Development Ordinance). All utility lines and services to be installed in the street shall be installed prior to paving.

Attachment: DIA_Animal Care Center_600 McHenry Rd (600 McHenry Road DIA)

2. Attached hereto as Exhibit "D" is a complete cost estimate for the construction of the improvement described in Exhibit "B" hereto. No later than three (3) business days following the execution of this Agreement and prior to the issuance of Village Permits, the Developer shall deposit a Letter of Credit acceptable to and in a form and substance approved by the Village in the original amount of Fifty Five Thousand Three Hundred Twenty Four and 00/100 Dollars ($55,324.00), as further described in Paragraph 9 herein (the "Letter of Credit").

3. All work shall be subject to inspection by and the approval of the Village Engineer. It is agreed that the contractors who are engaged to construct the Improvements are to be approved by the Village Engineer and that such approval will not be unreasonably withheld.

4. The Developer has paid or will pay the Village a Review and Inspection Fee, as required by Ordinance. It is understood that said fee is based on the amount of the contracts or cost estimate for those items in Exhibit "B".

5. Prior to the time the Developer or any of its contractors begin any of the work provided for herein, the Developer, and/or its contractors shall furnish the Village with evidence of insurance covering their employees in such amounts and coverage as is acceptable to the Village. Nothing herein shall waive any immunities the Village May assert in response to or defense of any such claim.

In addition, by its execution of this Agreement, the Developer agrees to protect, indemnify, save and hold harmless, and defend the Village and its employees, officials, and agents, against any and all claims, costs, causes, actions, and expenses, including but not limited to reasonable attorney's fees incurred by reason of a lawsuit or claim for damages or compensation arising in favor of any person, corporation or other entity, including the employees or officers or independent contractors or sub-contractors of the Developer or the Village, on account of personal injuries or death, or damages to property occurring, growing out of, incident to, or resulting directly or indirectly, from the performance of the work of the Developer, independent contractors or sub-contractors or their officers, agents, or employees. The Developer shall have no liability or damages for the costs incident thereto to the extent caused by the sole negligence or intentional misconduct of the Village, its independent contractors or sub-contractors or their officers, agents, or employees.

Attachment: DIA_Animal Care Center_600 McHenry Rd (600 McHenry Road DIA)

6. Subject to Force Majeure (as defined herein), Developer shall cause the Improvements to be completed within twenty-four (24) months following the date of this Agreement (except any Improvements for which specified time limits are noted on the Plans, which shall be completed within the specified time limits shown on the Plans). "Force Majeure" as used herein shall mean a delay in Developer's performance hereunder caused by a strike or labor problem, energy shortage, governmental pre-emption or prescription, national emergency, or any other cause of any kind beyond the reasonable control of Developer. If work is not completed within the time prescribed herein, the Village shall have the right to call upon the Letter of Credit, in accordance with its terms, for the purpose of completing the Improvements. Upon completion of the Improvements herein provided for, as evidenced by the certificate or certificates of the Village President and Board of Trustees, the Village shall be deemed to have accepted said Improvements, and thereupon, the Letter of Credit shall automatically be reduced to serve as security for the obligations of the Developer as set forth in Paragraph 7 hereof. The Developer shall cause its consulting engineers to correct drawings to show work as actually constructed and said engineers shall turn over high quality Mylar reproducible copies thereof to the Village to become the Village's property prior to acceptance of the Improvements by the President and Board of Trustees.

7. The Developer, for a period of one year beyond formal acceptance by the Village of any Improvement, described in Exhibit "B" hereof, shall be responsible for maintenance, repairs and corrections to such Improvements which may be required due to failures or on account of faulty construction or due to the Developer's negligence and/or its contractors' negligence. The obligation of the Developer hereunder shall be secured by the Letter of Credit as further described in Paragraph 9 hereof.

8. It is agreed that no occupancy permit shall be granted by any official for the construction of any structure until all required utility facilities set forth in the Plans (to include, but not by way of limitation, sanitary sewer, water and storm sewer systems) have been installed and made ready to service the Property; and that all parking lots or access drives (to include curbs) set forth in the Plans that provide access to the Property have been completely constructed, except for the designed surface course. It is understood and agreed that building permits may be granted for buildings on specific lots to which utility facilities have been installed and made ready for service and to which parking lots or access drives have

Attachment: DIA_Animal Care Center_600 McHenry Rd (600 McHenry Road DIA)

been constructed as described above, notwithstanding the fact that all improvements within the Development may not be completed.

9.A. The obligations of the Developer hereunder as to the deposit of security for the completion of the Improvements and the one year maintenance of said Improvements after acceptance by the Village (Paragraph 7) shall be satisfied upon delivery to the Village of a Letter of Credit in favor of the Village in a form acceptable to the Village, in the amount set forth in Paragraph 2 above. The Letter of Credit shall be made subject to this Agreement. The Developer hereby waives its option pursuant to 30 ILCS 550/3 and 65 ILCS 5/11-39-3 to utilize any type of security other than a Letter of Credit.

B. In addition to the terms, conditions, and covenants of the Letter of Credit, the Village hereby agrees to draw funds or to call said performance guarantee under such security solely for the purpose of payment for labor and materials supplied or to be supplied, by engineers, contractors, or subcontractors, to, or for the benefit of the Developer or the Village, as the case may be, under the provisions of this Agreement and the said Improvements for which payment is being made shall have been completed, or will be completed, in substantial accordance with the Plans.

C. The Village further hereby agrees that to the extent that the Developer causes the commitments of this Agreement to be completed, the outstanding liability of the issuer of the Letter of Credit shall during the course of construction of the Improvements, approximate the cost of completing all Improvements and paying unpaid contract balances for the completion of the Improvements referred to in this Agreement.

Until all required tests have been submitted and approved by the Village for each of the construction elements including, but not limited to, earthwork, street pavements, parking area pavements, sanitary sewers and water mains (as applicable), a minimum of that portion of the surety for each element shall be subject to complete retention. All Improvements are subject to a minimum fifteen (15%) percent retention until final acceptance by the Village.

D. In order to guarantee and warranty the obligations of Paragraph 7 herein, an amount equal to fifteen (15%) percent of the total amount of the Letter of Credit, or an amount equal to fifteen (15%) percent of the cost estimate of the individual Improvement(s) shall be retained in the Letter of

Attachment: DIA_Animal Care Center_600 McHenry Rd (600 McHenry Road DIA)

Credit for a period of one-year beyond formal acceptance by the Village of the Improvement(s).

E. As a portion of the security amount specified in Paragraph 2, the Developer shall maintain a cash deposit with the Village Clerk in the amount of Five Thousand Dollars ($5,000.00). If roads are not maintained with a smooth and firm surface reasonably adequate for access of emergency vehicles such as fire trucks and ambulances, or if any condition develops which is deemed a danger to public health or safety by the Village of Buffalo Grove due to the actions of the Developer or his failure to act; and after written notice of this condition, the Developer fails to immediately remedy the condition; then the Village may take action to remedy the situation and charge any expenses which results from the action to remedy the situation to the cash deposit. Upon notification that the cash deposit has been drawn upon, the Developer shall immediately deposit sufficient funds to maintain the deposit in the amount of Five Thousand Dollars ($5,000.00). If the Developer has not made the additional deposit required to maintain the total cash deposit within three (3) days from the date he received notice that such additional deposit was required, it is agreed that the Village may issue a Stop Work Order or also may revoke all permits which the Developer had been granted. This cash deposit shall continue to be maintained until the maintenance guarantee period has lapsed. The deposit may be drawn upon by the Village if the conditions of this Agreement are not met by the Developer within five (5) days after receipt of a written notice of noncompliance with the conditions of this Agreement, except in cases of danger to public health and safety as determined by the Village, in which case, the deposit may be drawn upon immediately following notice to the Developer and his failure to immediately remedy the situation. After termination of the one-year maintenance period and upon receipt by the Village Clerk of a written request for release of the deposit, the Village will either notify the Developer that the Improvements are not in a proper condition for final release of the deposit, or shall release the deposit within fifteen (15) days.

F. In addition to the terms, covenants, and conditions of the Letter of Credit, the Developer hereby agrees that no reduction shall occur in the outstanding liability of the issuer there under, except on the written approval of the Village; however, in all events, the Village shall permit such Letter of Credit to expire, either by its terms, or by return of such Letter of Credit to the Developer, upon

Attachment: DIA_Animal Care Center_600 McHenry Rd (600 McHenry Road DIA)

the expiration of one-(1) year from the acceptance of the Improvements referred to herein by the Village. To the extent that the provisions of Paragraph 9 herein, and of the Letter of Credit, permit the Village to draw funds under such Letter of Credit, the Village hereby agrees to reduce the outstanding liability of the issuer of the Letter of Credit to the extent that funds are disbursed.

10. Any Letter of Credit shall provide that the issuer thereof shall not cancel or otherwise terminate said security without a written notice being given to the Village between thirty-(30) days and forty-five (45) days in advance of termination or cancellation.

11. No occupancy permit shall be issued until all exterior lighting specified on Exhibit "C" is installed and operational.

12. The Developer acknowledges that he is responsible for the proper control of weeds, grass, refuse, and junk on all property which he owns within the Village in accordance with Chapter 8.32 of the Buffalo Grove Municipal Code. It is further agreed that the Developer shall continue to be responsible for the proper maintenance of any parcels of property for which the Developer transfers ownership to the Village until such time as the development's Improvements are accepted by the Village in writing in accordance with the provisions of this Agreement.

If the Developer fails to perform his maintenance responsibilities established in either this paragraph or Chapter 8.32, the Village may provide a written notice to the Developer of the improper maintenance condition. If proper maintenance is not completed within ten (10) days after the Developer is provided this notice, the Village may perform the maintenance and deduct the costs of the maintenance from the cash deposit described in Paragraph 9E.

13. The Developer agrees that no Improvements constructed in conjunction with this project are sized or located in such a way as to warrant any recapture payment to the Developer pursuant to any applicable previous agreements.

14. This Agreement shall automatically terminate and be of no further force and effect with respect to Developer or the Property upon the expiration of the one year maintenance period, and upon such termination the parties hereto shall have no further obligations to the other, except for the Village's obligation to return the Letter of Credit and cash deposit to Developer or otherwise notify the issuer of

Attachment: DIA_Animal Care Center_600 McHenry Rd (600 McHenry Road DIA)

the Letter of Credit of the expiration of the Letter of Credit. The period commencing on the date set forth in the preamble to this Agreement and expiring on the expiration of the one year maintenance period is referred to herein as the "Term".

15. This Agreement and the obligations contained herein are in addition to, and not in limitation of, all other agreements between the Parties hereto including, without limitation, the Preliminary Plan Approval Ordinance No. dated _____, and the obligations contained therein.

16. Neither party shall cause this Agreement (or any memorandum hereof) to be recorded against the Property.

IN WITNESS WHEREOF, the Village has caused this Agreement to be executed, as has the Developer, all as of the date first above written.

VILLAGE OF BUFFALO GROVE, an Illinois Municipal Corporation

By _____

Village President

DEVELOPER:

RWE Design Build
16 W 361 S. Frontage Rd, Suite 106
Burr Ridge, IL 60527

By: _____

Name: Jason Sanderson

Title: President

Attachment: DIA_Animal Care Center_600 McHenry Rd (600 McHenry Road DIA)

Animal Care Center of Buffalo Grove
(Development Name)

DEVELOPMENT IMPROVEMENT AGREEMENT

EXHIBIT A

LEGAL DESCRIPTION

THAT PART OF THE EAST HALF OF THE NORTHEAST QUARTER OF SECTION 32, AND THAT PART OF THE WEST HALF OF THE NORTHWEST QUARTER OF SECTION 33, ALL IN TOWNSHIP 43 NORTH, RANGE 11 EAST OF THE THIRD PRINCIPAL MERIDIAN, LYING SOUTHWESTERLY OF THE CENTER LINE OF STATE AID ROUTE 16 (ILLINOIS ROUTE 83) AS PER PLAT RECORDED NOVEMBER 5, 1931 AS DOCUMENT 374979, AND WESTERLY OF THE CENTER LINE OF BUFFALO GROVE ROAD AS PER PLAT RECORDED APRIL 9, 1942 AS DOCUMENT 511635 DESCRIBED AS FOLLOWS: COMMENCING AT THE INTERSECTION OF THE CENTER LINES OF THE AFORESAID ROUTE 83 AND BUFFALO GROVE ROAD, A DISATNCE OF 72.00 FEET; THENCE WESTERLY ALONG A LINE FORMING AN ANGLE OF 87 DEGREES 30 MINUTES TO THE RIGHT WITH A PROLONGATION OF THE LAST DESCRIBED LINE A DISTANCE OF 222.57 FEET; THENCE NORTHERLY ALONG A LINE FORMING AN ANGLE 90 DEGREES TO THE RIGHT WITH A PROLONGATION OF THE LAST DESCIBED LINE, A DISTANCE OF 119.10 FEET; THENCE NOTH EASTERLY ALONG A LINE TO A POINT IN THE CENTER LINE OF SAID ROUTE 83, SAID POINT BEING 162.45 FEET NORTHWESTERLY AS MEASURED ALONG SAID CENTER LINE OF THE INTERSECTION OF SAID ROUTE 83 AND BUFFALO GROVE ROAD; THENCE SOUTHEASTERLY ALONG THE CENTER LINE OF SAID ROUTE 83, 162.45 FEET TO THE PLACE OF BEGINNING, IN LAKE COUNTY, ILLINOIS, EXCEPTH THAT PART TAKEN BY THE STATE OF ILLINOIS DEPARTMENT OF TRANSPORTATION BY EMINENT DOMAIN IN CASE NO.84ED1.

KNOWN AS: **600 MCHENRY ROAD, BUFFALO GROVE, ILLINOIS**

PERMANENT INDEX NUMBER: 15-32-200-024-0000

AREA = 22,716 SQ. FT. OR 0.521 ACRES

Attachment: DIA_Animal Care Center_600 McHenry Rd (600 McHenry Road DIA)

Animal Care Center of Buffalo Grove
(Development Name)

DEVELOPMENT IMPROVEMENT AGREEMENT

EXHIBIT B

All improvements set forth and depicted in the Plans, both public and private, including (to the extent applicable) earthwork, grading, roads or streets, parking lots, areas and/or parking facilities, sidewalks, sanitary and storm sewers, water main, drainage and storm water detention facilities, site grading, street lighting, landscaping, survey monuments and benchmarks.

Attachment: DIA_Animal Care Center_600 McHenry Rd (600 McHenry Road DIA)

Animal Care Center of Buffalo Grove
(Development Name)

DEVELOPMENT IMPROVEMENT AGREEMENT

EXHIBIT C

Final Engineering and Landscaping Plans prepared by: Advantage Consulting Engineers

Entitled: Final Site Improvement Plans for Animal Care Center of Buffalo Grove

Consisting of: Seven (7) sheet(s), last revised August 3, 2020.

Final Landscaping Plans prepared by: Linden Group Inc.

Entitled: Landscape Plan

Consisting of: 1 sheet(s), last revised 12/22/2020

(see following pages)

Attachment: DIA_Animal Care Center_600 McHenry Rd (600 McHenry Road DIA)

Animal Care Center of Buffalo Grove
(Development Name)

DEVELOPMENT IMPROVEMENT AGREEMENT

EXHIBIT D

Engineers Opinion of Probable Costs

(see following pages)

Attachment: DIA_Animal Care Center_600 McHenry Rd (600 McHenry Road DIA)

Ordinance No. O-2021-6 : Ordinance Authorizing the Waiver of Bids and Authorization to Purchase Liquid De-Icing "Beet Heet"

Recommendation of Action

Staff recommends approval.

Staff requests authorization to waive bids and purchase "Beet Heet" from K-Tech Specialty products at a price not to exceed $52,000.00 for the 2021-2022 snow season, as further detailed in the attached memo.

ATTACHMENTS:

- 2021 Beet Heet (DOCX)
- Beet Heet Ordinance 2021 (DOCX)

Trustee Liaison	**Staff Contact**
Pike	Brett Robinson, Finance

Tuesday, January 19, 2021	

VILLAGE OF
BUFFALO GROVE

MEMORANDUM

DATE: January 14, 2021

TO: Dane Bragg, Village Manager

FROM: Bryan Beitzel – Maintenance Superintendent

SUBJECT: Request to waive bids and purchase specialty winter maintenance liquids

---

The Public Works Department is requesting authorization to waive bids and purchase winter maintenance liquids "Beet Heet" direct from the manufacturer (K-Tech Specialty Products).

Over the past several winter maintenance seasons the Public Works Department has been utilizing a product called "Beet Heet" Concentrate to meet winter maintenance liquids needs. This product is provided to the department direct from the manufacturer K-Tech Specialty Products, Inc. at a rate of $1.40 per gallon. This product is a concentrated proprietary formula of two (2) exothermic chlorides and two (2) endothermic chlorides blended with a high quality carbohydrate that has produced excellent results in our winter maintenance program. K-Tech is the sole source provider for the Beet Heet blend.

The Public Works Department has used several liquids through the years with varying results. "Geo-Melt 55" is a blended organic product tested in the past, which yielded very poor performance. Liquid Calcium Chloride is similar product; however, this single exothermic chloride "burns out" rapidly often requiring additional applications as surfaces re-freeze. This single chloride also lacks the carbohydrate necessary for adhesion during anti-icing activities making it ineffective at "pre-treating" roads prior to snow and ice events.

The effectiveness of "Beet Heet" has enabled the Public Works Department to expand the liquid usage program, including a full anti-icing program during the winter season. It has also allowed the department to reduce the amount of road salt applied during winter maintenance operations, as increase the liquid output on our primary winter maintenance fleet. This concentrated product is typically "blended down" with Salt Brine, allowing the Public Works Department to target our application rates consistent with storm and road conditions.

Staff requests Board approval to waive bids and purchase "Beet Heet " in an amount not to exceed $52,000 for the 2021-2022 snow season from the sole source provider K-Tech Specialty Products. The Street Section annual budget includes the costs for this material and this purchase is fully funded.

ORDINANCE 2021-____

A ORDINANCE AUTHORIZING THE PURCHASE OF BEET HEET FROM K-TECH SPECIALTY PRODUCTS

WHEREAS, the Village of Buffalo is a home rule unit pursuant to the Illinois Constitution of 1970; and

WHEREAS, the Village of Buffalo Grove Public Works Department has performed testing and determined that "Beet Heet" from K-Tech Specialty Products provides the best value for winter maintenance liquids for snow and ice removal needs.

NOW THEREFORE, BE IT ORDAINED BY THE PRESIDENT AND BOARD OF TRUSTEES OF THE VILLAGE OF BUFFALO GROVE, COOK AND LAKE COUNTIES, ILLINOIS, as follows:

SECTION 1. The foregoing recitals are hereby adopted and incorporated and made a part of this Ordinance as if fully set forth herein.

SECTION 2. The Village Board hereby waives bidding requirements and authorizes The Village Manager to procure "Beet Heet" from K-Tech Specialty Products at a price not to exceed $52,000

SECTION 3. If any section, paragraph, clause or provision of this Ordinance shall be held invalid, the invalidity thereof shall not affect any other provision of this Ordinance.

SECTION 4. This Ordinance shall be in full force and effect from and after its passage and approval and not be codified.

AYES: _____
NAYES: _____
ABSENT: _____
PASSED: _____, 2021
APPROVED: _____, 2021

APPROVED:

_____
Beverly Sussman, Village President

ATTEST:

_____
Janet Sirabian, Village Clerk

Resolution No. R-2021-4 : Resolution Authorizing Village Manager to Execute an Intergovernmental Agreement with Northwest Central Dispatch System for Federal Funds to Support the CAD/RMS Project

Recommendation of Action

Staff recommends approval of a resolution authorizing the Village Manager to execute an intergovernmental agreement between the Village of Buffalo Grove and Northwest Central Dispatch to release funds awarded by the Department of Justice to support the CAD/RMS implementation.

The Village was awarded grant funds through the National Crime Statistics Exchange project and the National Incident Based Reporting System (NIBRS) to support the NWCDS Computer Aided Dispatch and Records Management System projects. The Village serves as the grant administrator and as a pass-through for federal funds. The proposed agreement memorializes the rights and responsibilities of the parties to administer and distribute the funds. Further, the resolution authorizes the Village Manager to execute the agreement and distribute the funds to NWCDS and its eligible subcontractors, in accordance with all grant requirements.

ATTACHMENTS:

- 01-19-21 NWCDS NIBRS Grant Resolution (DOC)
- Intergovernmental Agreement VBG and Northwest Central Dispatch System Updated 01-05-21 (DOCX)

Trustee Liaison
Smith

Staff Contact
Dane Bragg, Office of the Village Manager

Tuesday, January 19, 2021	

RESOLUTION 2021-__

A RESOLUTION AUTHORIZING THE VILLAGE MANAGER TO EXECUTE AN INTERGOVERNMENTAL AGREEMENT BY AND BETWEEN THE VILLAGE OF BUFFALO GROVE AND NORTHWEST CENTRAL DISPATCH SYSTEM

WHEREAS, Buffalo Grove applied for and was awarded a grant by the Department of Justice to further the National Crime Statistics Exchange project, which is an effort to expand the FBI's National Incident Based Reporting System ("NIBRS"); and

WHEREAS, in furtherance of that project and grant Buffalo Grove, through its police department will procure a NIBRS a records management system, obtain hardware and software, procure equipment and train personnel; and

WHEREAS, in furtherance of the project and grant NWCDS will procure equipment to be used by its other member agencies will manage funding of said equipment through Buffalo Grove solely using grant proceeds; and

WHEREAS, it is in the best interests of the parties to expedite the implementation of the project and the distribution of funds in furtherance of the project goals; and

WHEREAS, the Parties wish to enter into an Intergovernmental Agreement jointly for this purpose.

NOW, THEREFORE, BE IT RESOLVED by the President and Board of Trustees of the Village of Buffalo Grove, Lake and Cook Counties, Illinois, as follows:

SECTION ONE: The Village Manager is hereby authorized and directed to execute the attached intergovernmental agreement on behalf of the Village of Buffalo Grove.

SECTION TWO: The Village Manager is further authorized and directed to process invoices for the project and distribute funds on behalf of the Village, Northwest Central Dispatch and its members, subject to the grant requirements and the attached intergovernmental agreement.

Attachment: 01-19-21 NWCDS NIBRS Grant Resolution (R-2021-4 : NWCDS IGA DOJ Grant)

SECTION FIVE: EFFECTIVE DATE. This Resolution shall be in full force and effect upon passage and approval.

ROLL CALL VOTE:
AYES:
NAYS:
ABSENT:

_____
Village President Beverly Sussman

ATTEST:

_____
Village Clerk Janet Sirabian

INTERGOVERNMENTAL AGREEMENT BETWEEN THE VILLAGE OF BUFFALO GROVE AND THE NORTHWEST CENTRAL DISPATCH SYSTEM REGARDING GRANT MONEY DISBURSEMENT

THIS AGREEMENT ("this Intergovernmental Agreement" or "this Agreement"), made and entered into as of the effective date set forth in Section 1 of this Agreement, by and between the VILLAGE OF BUFFALO GROVE, an Illinois municipal corporation ("Buffalo Grove") and Home Rule Unit, and the NORTHWEST CENTRAL DISPATCH SYSTEM, an Illinois municipal corporation ("NWCDS"), and the aforesaid parties are sometimes collectively referred to herein as the "Parties", and separately referred to as a "Party":

W I T N E S S E T H:

WHEREAS, Article VII, Section 10, of the Constitution of the State of Illinois of 1970 provides that units of local government may contract or otherwise associate among themselves to obtain or share services and to exercise, combine, or transfer any power or function in any manner not prohibited by law or by ordinance and may use their credit, revenues, and other resources to pay costs related to intergovernmental activities, and the Intergovernmental Cooperation Act, 5 ILCS 220/1, et seq. further authorizes intergovernmental cooperation; and

WHEREAS, Buffalo Grove applied and was awarded a grant by the Department of Justice to further the National Crime Statistics Exchange project, which is an effort to expand the FBI's National Incident Based Reporting System ("NIBRS"); and

WHEREAS, in furtherance of that project and grant Buffalo Grove, through its police department will procure a NIBRS a records management system, obtain hardware and software, procure equipment and train personnel; and

WHEREAS, in furtherance of the project and grant NWCDS will procure equipment to be used by its other member agencies will manage funding of said equipment through Buffalo Grove solely using grant proceeds; and

WHEREAS, the Parties wish to enter into this Intergovernmental Agreement jointly for this purpose:

NOW THEREFORE, in consideration of the mutual agreements contained herein, Buffalo Grove and NWCDS agree as follows:

1. This Intergovernmental Agreement shall be dated and become effective as of the date of the authorized execution by the last Party to both approve and execute this Agreement (the "effective date"). This Agreement shall be effective for the term of the grant which is September 2021.

2. This Agreement may also be terminated by either Party at any time with or without cause by one Party giving written notice to the other Party at least sixty (60) days prior to the intended effective date of termination.

3. Buffalo Grove and NWCDS agree to utilize their respective joint efforts and mutual cooperation for the purposes as described herein.

4. Upon NWCDS procuring equipment in furtherance of the terms of the grant, it shall tender all eligible invoices from the contract provider to Buffalo Grove. Buffalo Grove shall pay said invoices solely out of grant proceeds if, in Buffalo Grove's sole discretion, said invoices are in compliance with the terms of the grant and only if there are available grant proceeds for such payment. Any amounts submitted by NWCDS that are not covered by grant proceeds shall be paid by NWCDS and shall not be an indebtedness of Buffalo Grove.

5. Notwithstanding any other provisions of this Agreement, NWCDS shall ensure that any sub-recipients of grant proceeds or equipment shall comply with the terms of the grant and this Agreement. Further, any equipment purchased by NWCDS or a sub-recipient shall be their sole responsibility to own and maintain.

6. Each party to this Agreement shall provide to the other party the name of a person who shall be a "point of contact" ("POC") for promoting open and cooperative discussions on the shared services to be provided pursuant to this Agreement.

7. NWCDS shall and does hereby agree to defend, indemnify and hold harmless Buffalo Grove and its elected officials, officers, agents and employees, from any and all liability, loss, costs, damages, expenses or injury to person or property, including reasonable attorneys' fees and other costs of defense arising out of or resulting from the services provided by and tasks performed by NWCDS employees, or arising out of or resulting from the sole action, negligence, malfeasance or misfeasance of NWCDS or its officers, employees, and/or agents in the performance or non-performance of any act pursuant to this Agreement, and from any claims by any employee of NWCDS, provided, however, NWCDS does not in any way waive or abrogate the tort immunity of NWCDS or of any of its officers, employees, and/or agents by reason of this provision.

8. Buffalo Grove shall and does hereby agree to defend, indemnify and hold harmless NWCDS and its officers, agents and employees, from any and all liability, loss, costs, damages, expenses or injury to person or property, including reasonable attorneys' fees and other costs of defense arising out of or resulting from the sole action, negligence, malfeasance or misfeasance of Buffalo Grove or its officers, employees, and/or agents in the performance or non-performance of any act pursuant to this Agreement, and from or any claims by any employee of Buffalo Grove, provided, however, Buffalo Grove does not in any way waive or abrogate the tort immunity of Buffalo Grove or of any of its officers, employees, and/or agents by reason of this provision.

9. This Agreement may be amended only by a written instrument executed by both Parties hereto and only if prior authorization has been provided by the appropriate legislative action of the respective corporate authorities of each Party.

10. Force Majeure: If the performance by either party to this Agreement is prevented or made impractical by epidemic, pandemic, strikes, accidents, acts of God, weather conditions, labor shortages, regulations or restrictions imposed by a government or governmental agency other than Buffalo Grove or NWCDS or other delays or occurrences beyond the control of the parties, then this Agreement shall be considered to be suspended during the period when such cause exists or its effects persist.

11. Mutual Cooperation: Each of the parties acknowledges the working nature of this Agreement, and each party agrees to mutually cooperate and consult with the other party in an effort to speedily and amicably resolve any unforeseen difficulties or problems not expressly covered by this Agreement. Buffalo Grove and NWCDS respectively agree to each make, execute, and deliver such written instruments as shall from time to time be reasonably required to carry out the terms, provisions, and intent of this Agreement. Any approval or consent required of a party to this Agreement shall not be unreasonably withheld.

12. Notices.

(A) All notices, requests, demands, and other communications (collectively, "Notices") hereunder shall be in writing and given by (i) established express delivery service which maintains delivery records, (ii) hand delivery, (iii) certified or registered mail, postage prepaid, return receipt requested, or (iv) by email to Buffalo Grove or to NWCDS, as the case may be, and to their respective attorneys, with a hard copy of said email notice mailed by regular mail to each of said Parties, to the Parties at the following addresses, or at such other address as the Parties may designate by Notice in the above manner:

To Buffalo Grove:
Village of Buffalo Grove
50 Raupp Blvd.
Buffalo Grove, IL 60089
Attn: Village Manager
Email: dbragg@vbg.org

To NWCDS:
Northwest Central Dispatch System
1975 E. Davis Street
Arlington Heights, IL 60005
Attn: Executive Director
Email: jferraro@nwcds.org

With a Copy to:
Attorney Patrick Brankin
Schain, Banks, Kenny and Schwartz
70 W. Madison Street, Suite 5300
Chicago, IL 60602
Email: pbrankin@schainbanks.com

With a Copy to:
Attorney John H. Kelly
1804 N. Naper Blvd., Ste. 350
Naperville, IL 60563
Email: jkelly@ottesenbritz.com

Notices are effective upon receipt, or upon attempted delivery if delivery is refused or impossible because of failure to provide a reasonable means for accomplishing delivery.

(B) A courtesy copy of all notices shall be sent via email. Such notices shall be addressed using the contact information provided in this Section, which may be amended from time to time with notice provided per this Section, or the most recent contact information available on the official website of each Party. Notice as provided herein does not waive service of summons or process.

13. Miscellaneous:

(A) Section and/or paragraph titles are descriptive only and do not define or in any other way limit the contents of each such section or paragraph. Words of the masculine gender shall be read to include the feminine and neuter genders, and the singular shall include the plural.

(B) If any provision of this Agreement shall be declared invalid for any reason, such invalidation shall not affect any other provisions of this Agreement which can be given effect without the invalid provision and to that extent, the provisions of this Agreement are severable.

(C) This Agreement sets forth the entire understanding of the Parties relative to the subject hereof and supersedes any and all prior agreements, express or implied, oral or written.

(D) This Agreement shall be governed by the applicable laws of the State of Illinois.

(E) This Agreement shall be binding on all Parties and may not be modified or amended orally, but only in writing signed by all Parties hereto.

(F) The Parties each agree that they shall at all times observe and comply with the requirements of the grant as well as laws, ordinance, regulations, and codes of the Federal, State, County,

and other local governmental agencies that may in any manner affect the performance of this Agreement.

(G) Each Party to this Agreement represents to the other that all necessary corporate action with respect to this Agreement has been taken, and that this Agreement has therefore been duly authorized, executed and delivered by it.

(H) If either Party waives a breach of any provision of this Agreement by the other Party, that waiver will not operate or be construed as a waiver of any subsequent breach by either Party nor shall it prevent either Party from enforcing such provisions.

(I) This Agreement may be executed in one or more identical counterparts, which counterparts, when affixed together, shall constitute one and the same document.

(J) Only the respective Parties to this Agreement, Buffalo Grove and the NCDS, and no other party, shall have the right to enforce this Agreement.

(K) Each Party represents to the other Parties that such Party has full authority to execute this Agreement and fulfill the terms, conditions, provisions, and obligations herein provided.

IN WITNESS WHEREOF, the Parties hereto have, pursuant to the authority of the respective Corporate Authorities of the Parties, caused this Agreement to be executed, attested and delivered by its duly authorized officers as of the respective dates written below.

VILLAGE OF BUFFALO GROVE	NORTHWEST CENTRAL DISPATCH SYSTEM
By: _____ Dane Bragg, Village Manager	By: _____ John Ferraro, Executive Director
Date of Execution: _____, 2021	Date of Execution: _____, 2021

F:\PTBrankin\Buffalo Grove, Village\Agreements\Intergovernmental Agreement VBG and Northwest Central Dispatch System.docx