AGENDA

BUFFALO GROVE VILLAGE BOARD

Regular Meeting: March 17, 2025 at 7:00 PM

Jeffrey S. Braiman Council Chambers, Village Hall
50 Raupp Blvd, Buffalo Grove, IL 60089

1. Call to Order

a. Pledge of Allegiance

b. Roll Call

2. Approval of Minutes

a. Draft Minutes of the February 18, 2025 Village Board Regular Meeting

b. Draft Minutes of the March 3, 2025 Village Board Committee of the Whole Meeting

3. Approval of Warrant

a. Approval of Warrant #1379 (Trustee Bocek, Chris Black)

4. Village President's Report

5. Village Manager's Report

a. Fire Department Swearing In of Lieutenant Jay Huh (Trustee Cesario, Lawrence Kane)

6. Special Business

7. Reports from Trustees

8. Consent Agenda

All items listed on the Consent Agenda, which are available in this room this evening, are considered to be routine by the Village Board and will be enacted by one motion. There will be no separate discussion of these items unless a Board member or citizen so requests, in which event, the item will be removed from the General Order of Business and considered after all other items of business on the Regular Agenda under New Business.

a. O-2025-31 Ordinance Authorizing a Development Improvement Agreement with District 214 for the Athletic Field Renovations Phase 2 (Trustee Stein, Kyle Johnson)

b. O-2025-32 Ordinance Authorizing the Certificate of Initial Acceptance for Driven Car Wash (Trustee Stein, Kyle Johnson)

c. O-2025-33 Ordinance Authorizing the Certificate of Initial Acceptance for Lazy Dog (Trustee Stein, Kyle Johnson)

d. O-2025-34 Ordinance Authorizing a Contract with SKC Construction, Inc for the 2025 Cracksealing Project (Trustee Stein, Kyle Johnson)

e. O-2025-35 Ordinance Authorizing a Contract with Denler, Inc. for the 2025 Parking Lot Improvements Project (Trustee Stein, Kyle Johnson)

f. O-2025-36 Ordinance Amending Title 10 of the Village Code to Prohibit Parking on Raupp Boulevard at the Temporary Fire Station (Trustee Stein, Kyle Johnson)

g. O-2025-37 Ordinance Authorizing a Contract with HighStar Traffic for the 2025 Paving Marking Project (Trustee Stein, Kyle Johnson)

h. O-2025-38 Ordinance Authorizing the Disposal of Surplus Property (Trustee Bocek, Chris Black)

i. O-2025-39 Ordinance Approving a Special Use for a Child Home Daycare at 456 Chicory. (Trustee Weidenfeld, Nicole Woods)

j. O-2025-40 Ordinance accepting a bid and authorizing Fredrick Quinn Corporation to execute a contract with Break Through Enterprises for the Demolition of the existing Fire Station 25 (Trustee Stein, Lawrence Kane)

k. O-2025-41 Ordinance Amending Chapter 15.14 of the Village Code As It Relates to Adopting the 2021 Illinois Energy Conservation Code (Trustee Weidenfeld, Nicole Woods)

l. O-2025-42 Ordinance authorizing the Disposal and Sale of Surplus Property (Trustee Bocek, Brian Budds)

m. O-2025-43 Ordinance Authorizing a Contract with ASTI Sawing, INC. for the 2025 Sidewalk Cutting Project (Trustee Stein, Briget Schwab)

n. O-2025-44 Ordinance Authorizing a Contract with Corrective Asphalt Materials for the 2025 Pavement Rejuvenation Project (Trustee Stein, Briget Schwab)

9. Ordinances and Resolutions

a. O-2025-45 An Ordinance providing for the issuance of approximately $26,000,000 General Obligation Bonds, Series 2025, of the Village of Buffalo Grove, Lake and Cook Counties, Illinois, to finance capital improvements in and for the Village including, but not limited to, construction of new fire stations and street improvements, providing for the levy and collection of a direct annual tax sufficient to pay the principal and interest on said bonds, and authorizing the sale of said bonds to the purchaser thereof. (Trustee Bocek, Chris Black)

b. R-2025-13 A Resolution Approving the Declaration of Trust of the Illinois Trust and Authorizing the Execution thereof and Authorizing Certain Officials to Act on Behalf of the Village of Buffalo Grove (Trustee Bocek, Chris Black)

c. O-2025-46 Ordinance authorizing a Contract with Wallace Roberts & Todd LLC., for Clove Park Concept Design Services. (Trustee Weidenfeld, Nicole Woods)

d. O-2025-47 Ordinance Authorizing a Contract with Builders Paving, LLC for the 2025 Pavement Patching Project (Trustee Stein, Kyle Johnson)

e. O-2025-48 Ordinance Authorizing a Contract with Globe Construction Inc. for the 2025 Sidewalk Replacement Project (Trustee Stein, Briget Schwab)

f. O-2025-49 Ordinance Authorizing a Contract with Integral Power Atlantic, LLC for Streetlight Maintenance (Trustee Stein, James Warnstedt)

g. O-2025-50 Ordinance Authorizing the Purchase of one Department of Public Works Fleet Vehicle from JX Truck Center (Trustee Stein, James Warnstedt)

h. O-2025-51 Ordinance Authorizing the Purchase of one Department of Public Works Fleet Vehicle from Bonnell Industries, Inc. (Trustee Stein, James Warnstedt)

i. O-2025-52 Ordinance Authorizing a Water Purchase and Sale Contract By and Between Village of Buffalo Grove and Village of Long Grove (Trustee Stein, Mike Skibbe)

10. Unfinished Business

11. New Business

a. Pre-Application Discussion for Dream Car Wash Development at 1355 Dundee Road (Trustee Weidenfeld, Nicole Woods)

12. Public Comment

Public Comment is limited to items that are not on the regular agenda. In accordance with Section 2.02.070 of the Municipal Code, discussion on questions from the audience will be limited to 5 minutes and should be limited to concerns or comments regarding issues that are relevant to Village Board business. All members of the public addressing the Village Board shall maintain proper decorum and refrain from making disrespectful remarks or comments relating to individuals. Speakers shall use every attempt to not be repetitive of points that have been made by others. The Village Board may refer any matter of public comment to the Village Manager, Village staff or an appropriate agency for review.

13. Executive Session

14. Adjournment

The Village Board will make every effort to accommodate all items on the agenda by 10:30 p.m. The Board does, however, reserve the right to defer consideration of matters to another meeting should the discussion run past 10:30 p.m.

The Village of Buffalo Grove, in compliance with the Americans with Disabilities Act, requests that persons with disabilities who require certain accommodations to allow them to observe and/or participate in this meeting or have questions about the accessibility of the meeting or facilities, contact the ADA Coordinator at 847-459-2500 to allow the Village to make reasonable accommodations for those persons.

AGENDA ITEM SUMMARY

BUFFALO GROVE VILLAGE BOARD

Regular Meeting: March 17, 2025

AGENDA ITEM 2.a.
Draft Minutes of the February 18, 2025 Village Board Regular Meeting

Contacts

Liaison: Clerk Sirabian
Staff: Samina Shaikh

Staff Recommendation

Staff recommends approval.

Recommended Motion

I move to approve the minutes of the February 18, 2025 Village Board Regular Meeting.

Summary

N/A

Strategic Alignment

Guiding Principle

Principle 2: Outstanding Village Services

Goal

Goal 1: Maintained effective village government: fiscally responsible and providing outstanding, responsive services

File Attachments

1. Draft Minutes - 02/18/2025 Regular Meeting

smart. with heart.
50 Raupp Blvd, Buffalo Grove, IL 60089 847-459-2500 vbg.org

MINUTES OF THE REGULAR MEETING OF THE VILLAGE PRESIDENT & BOARD OF TRUSTEES OF THE VILLAGE OF BUFFALO GROVE HELD IN THE JEFFREY S. BRAIMAN COUNCIL CHAMBERS, 50 RAUPP BOULEVARD, BUFFALO GROVE, ILLINOIS TUESDAY, FEBRUARY 18, 2025

CALL TO ORDER

President Pro Tem Stein called the meeting to order at 7:00 P.M. Those present stood and pledged allegiance to the Flag.

ROLL CALL

Roll call indicated the following present: Trustees Cesario, Ottenheimer, Stein, Bocek, and Weidenfeld. President Smith and Trustee Johnson were absent.

President Pro Tem Stein noted that President Smith, Trustee Johnson and Village Manager Bragg are in Springfield meeting with our legislators this week.

Also present were: Chris Stilling, Acting Village Manager; Patrick Brankin, Village Attorney; Mike Skibbe, Deputy Village Manager/Director of Public Works; Jim Warnstedt, Deputy Director of Public Works; Kyle Johnson, Deputy Public Works Director/Village Engineer; Tom Wisniewski, Buyer; Katie Golbach, Director of Human Resources; Kelly Purvis, Deputy Director of Community Development; Chris Black, Director of Finance; Tim Kirsininkas, Communications Coordinator; Geoff Tollefson, Director of Golf Operations; Fire Chief Kane; and Police Chief Budds.

APPROVAL OF MINUTES

Moved by Weidenfeld, seconded by Ottenheimer, to approve the minutes of the January 21, 2025, Regular Meeting. Upon roll call, Trustees voted as follows:

AYES: 5 – Cesario, Ottenheimer, Stein, Bocek, Weidenfeld
NAYS: 0 – None
ABSENT: 1 – Johnson
Motion declared carried.

Moved by Bocek, seconded by Cesario, to approve the minutes of the February 3, 2025, Committee of the Whole Meeting. Upon roll call, Trustees voted as follows:

AYES: 5 – Cesario, Ottenheimer, Stein, Bocek, Weidenfeld
NAYS: 0 – None
ABSENT: 1 – Johnson
Motion declared carried.

WARRANT #1378

Mr. Black read Warrant #1378. Moved by Bocek, seconded by Weidenfeld, to approve Warrant #1378 in the amount of $6,691,216.30 authorizing payment of bills listed. Upon roll call, Trustees voted as follows:

AYES: 5 – Cesario, Ottenheimer, Stein, Bocek, Weidenfeld
NAYS: 0 – None
ABSENT: 1 – Johnson
Motion declared carried.

VILLAGE PRESIDENT'S REPORT

There is no Village President's Report tonight.

DRAFT

VILLAGE MANAGER'S REPORT

There is no Village Manager's Report tonight.

SPECIAL BUSINESS

Chief Budds reviewed the **Police Department Officer of the Year Award** and the Special Commendation Award to be presented tonight. Chief Budds thanked the Police Awards Committee and the Rotary Club, sponsor of these awards.

Past Rotary Club President Shawn Collins presented a brief background on Rotary, after which he reviewed the accomplishments of this year's Special Commendation Award recipient, Officer Gabriel Augustyniak, who earned this award for his continued dedication and outstanding performance in traffic safety enforcement. Officer Augustyniak was congratulated by the audience and the Board as he thanked Rotary and his coworkers for this recognition.

Mr. Collins reviewed the achievements of Officer Timothy Kroski, who received the Police Department's highest honor as Officer of the Year for 2024. Officer Kroski was nominated by his peers for his excellent performance in various roles with the Department over the course of the past year, including serving as a field training officer, a member of the midnight shift and a School Resource Officer for Buffalo Grove High School. As he was congratulated by the audience and the Board, Officer Kroski thanked the Rotary Club, and his coworkers and the command staff of the Buffalo Grove Police Department for this recognition, noting that the Buffalo Grove Police Department truly is a family, and he is honored to be a part of it.

TRUSTEE REPORTS

There are no Trustee Reports tonight.

CONSENT AGENDA

President Pro Tem Stein explained the Consent Agenda, stating that any member of the audience or the Board could request that an item be removed for full discussion; there were no such requests. The Village Clerk read a brief synopsis of each of the items on the Consent Agenda.

2025 Recertification

Motion to approve Community Rating System 2025 Annual Recertification Information.

Ordinance No. 2025-21 - Intergovernmental Governmental Agreement

Motion to pass Ordinance No. 2025-21 authorizing an Intergovernmental Governmental Agreement with IPWMAN.

Ordinance No. 2025-22 - Intergovernmental Agreement

Motion to pass Ordinance No. 2025-22 approving an Intergovernmental Agreement with the Lake County Stormwater Management Commission to receive funding for Bordeaux Natural Area.

Ordinance No. 2025-23 - Jefferson Fire Equipment

Motion to pass Ordinance No. 2025-23 authorizing the Purchase of Holmatro Extrication Equipment from Jefferson Fire Equipment.

Ordinance No. 2025-30 - Pump Station 6

Motion to pass Ordinance No. 2025-30 approving Revisions to Budget Scoping for a Grant Agreement from the State of Illinois for Work on Pump Station 6.

DRAFT

Ordinance No. 2025-24 - 750 Hastings Lane

Motion to pass Ordinance No. 2025-24 approving a Temporary Construction Easement at 750 Hastings Lane.

Ordinance No. 2025-25 - 1390 Busch Parkway

Motion to pass Ordinance No. 2025-25 approving a Special Use for a Child Care Facility at 1390 Busch Parkway.

Ordinance No. 2025-26 -1250 Radcliffe

Motion to pass Ordinance No. 2025-26 approving a Sign Variation at 1250 Radcliffe.

Resolution No. 2025-11 - 2025 Zoning Map

Motion to pass Resolution No. 2025-11 adopting the 2025 Zoning Map.

Ordinance No. 2025-27 - Fleet Vehicle

Motion to pass Ordinance No. 2025-27 authorizing the Purchase of One Fire Department Fleet Vehicle from Currie Motors.

Moved by Cesario, seconded by Ottenheimer, to approve the Consent Agenda as presented. Upon roll call, Trustees voted as follows:

AYES: 5 – Cesario, Ottenheimer, Stein, Bocek, Weidenfeld
NAYS: 0 – None
ABSENT: 1 – Johnson
Motion declared carried.

ORDINANCE NO. 2025-28 – FIRE STATION 25

Moved by Cesario, seconded by Weidenfeld, to pass Ordinance No. 2025-28 authorizing execution the Village Manager to enter into an Agreement with Fredrick Quinn Construction for Construction Management Services for the building of Fire Station 25.

Chief Kane reviewed the proposed ordinance, details of which are contained in his memo to Mr. Bragg of February 10, 2025, after which he answered questions from the Board.

Upon roll call, Trustees voted as follows:

AYES: 5 – Cesario, Ottenheimer, Stein, Bocek, Weidenfeld
NAYS: 0 – None
ABSENT: 1 – Johnson
Motion declared carried.

RESOLUTION NO. 2025-12 – 1650 LEIDER LANE

Moved by Ottenheimer, seconded by Weidenfeld, to pass Resolution No. 2025-12 authorizing the Village Manager to execute a Use Agreement and License with Long Grove Fire Protection District (LGFPD) for the Village-owned property at 1650 Leider Lane, pending final review and approval by the Village Attorney.

Mr. Stilling reviewed the proposed ordinance, details of which are contained in his memo to Mr. Bragg of February 13, 2025, after which he answered questions from the Board.

DRAFT

Upon roll call, Trustees voted as follows:

AYES: 5 – Cesario, Ottenheimer, Stein, Bocek, Weidenfeld
NAYS: 0 – None
ABSENT: 1 – Johnson
Motion declared carried.

ORDINANCE NO. 2025-29 – VILLAGE MANAGER COMPENSATION

Moved by Cesario, seconded by Weidenfeld, to pass Ordinance No. 2025-29 recommending approval of an ordinance establishing compensation for the Village Manager in accordance with materials contained in Board packets.

Board members reviewed the evaluation process and the accomplishments of the Village Manager, noting that the Village of Buffalo Grove and its residents are fortunate to have Mr. Bragg as our Village Manager.

Upon roll call, Trustees voted as follows:

AYES: 5 – Cesario, Ottenheimer, Stein, Bocek, Weidenfeld
NAYS: 0 – None
ABSENT: 1 – Johnson
Motion declared carried.

PUBLIC COMMENT

President Pro Tem Stein reviewed the parameters to be followed by speakers and asked if there were any questions from the audience on items not on tonight's agenda.

Dylan Sharkey, Assistant Editor at the Illinois Policy Institute, commented urging the Board to refrain from instituting the 1% grocery tax which was recently cut by the Governor.

Mr. Stilling responded to Mr. Sharkey stating that he would be happy to be in contact with him, but no decisions have been made and there are no plans regarding the 1% tax in the near future.

ADJOURNMENT

Moved by Weidenfeld, seconded by Ottenheimer, to adjourn the meeting. Upon roll call, Trustees voted as follows:

AYES: 5 – Cesario, Ottenheimer, Stein, Bocek, Weidenfeld
NAYS: 0 – None
ABSENT: 1 – Johnson
Motion declared carried.

The meeting was adjourned at 7:33 P.M.

_____
Janet M. Sirabian, Village Clerk

APPROVED BY ME THIS 17th DAY OF March 2025

_____
Village President

DRAFT

AGENDA ITEM SUMMARY

BUFFALO GROVE VILLAGE BOARD

Regular Meeting: March 17, 2025

AGENDA ITEM 2.b.
Draft Minutes of the March 3, 2025 Village Board Committee of the Whole Meeting

Contacts

Liaison: Clerk Sirabian
Staff: Samina Shaikh

Staff Recommendation

Staff recommends approval.

Recommended Motion

I move to approve the minutes of the March 3, 2025 Village Board Committee of the Whole Meeting.

Summary

N/A

Strategic Alignment

Guiding Principle

Principle 2: Outstanding Village Services

Goal

Goal 1: Maintained effective village government: fiscally responsible and providing outstanding, responsive services

File Attachments

1. Draft Minutes - 03/03/2025 Committee of the Whole Meeting

smart. with heart.
50 Raupp Blvd, Buffalo Grove, IL 60089 847-459-2500 vbg.org

MINUTES OF THE COMMITTEE OF THE WHOLE MEETING OF THE VILLAGE PRESIDENT & BOARD OF TRUSTEES OF THE VILLAGE OF BUFFALO GROVE HELD IN THE JEFFREY S. BRAIMAN COUNCIL CHAMBERS AT VILLAGE HALL, 50 RAUPP BOULEVARD, BUFFALO GROVE, ILLINOIS, MONDAY MARCH 3, 2025

CALL TO ORDER

President Smith called the meeting to order at 7:00 P.M. Those present stood and pledged allegiance to the Flag.

ROLL CALL

Roll call indicated the following present: President Smith; Trustees Johnson, Cesario, Ottenheimer, Stein, Bocek, and Weidenfeld.

Also present were: Dane Bragg, Village Manager; Patrick Brankin, Village Attorney; Chris Stilling, Deputy Village Manager; Mike Skibbe, Deputy Village Manager/Director of Public Works; Tyler Grace, Assistant Village Manager – Administrative Services; Chris Black, Finance Director; Katie Golbach, Director of Human Resources; Molly Gillespie, Communications Director; Nicole Woods, Director of Community Development; Jim Warnstedt, Deputy Public Works Director; Police Chief Budds; and Fire Chief Kane.

The **Committee of the Whole Meeting** consisted of staff reports and Board discussion on the listed topics, with staff answering questions from the Board on each topic.

VILLAGE PRESIDENT'S REPORT

There is no Village President's Report tonight.

PUBLIC WORKS EMPLOYEE OF THE YEAR

Mr. Skibbe reviewed the long list of accomplishments of our **Public Works Employee of the Year, Tim Malinowski**, after which a short video was shown highlighting Tim's career. Tim is a 34-year veteran of our Public Works Department, working to make sure that Buffalo Grove streets and infrastructure remain in top-notch condition. Tim is often seen around Buffalo Grove patching potholes, plowing streets and lending a helping hand to his teammates wherever he's needed.

Mr. Malinowksi thanked his coworkers and the Board for this honor and noted that he has enjoyed his 34-year career in Buffalo Grove and appreciates this recognition.

2025 COMMUNITY SURVEY PROCESS

Mr. Grace reviewed the 2025 Community Survey process that will be undertaken this year, highlighting what residents may expect regarding the survey, details of which are contained in the Agenda Item Summary that he prepared, after which he answered questions from the Board.

STATION 25 PROJECT UPDATE

Chief Kane provided an update on the new Station 25 project, as well as the status of the temporary Station 25, after which he answered questions from the Board.

QUESTIONS FROM THE AUDIENCE

President Smith reviewed the parameters to be followed by speakers and asked if there were any questions from the audience on items not on tonight's agenda; there were no such questions.

DRAFT

EXECUTIVE SESSION

Moved by Cesario, seconded by Johnson, to move to Execution Session to discuss: **Section 2(C)(11) of the Illinois Open Meetings Act: Litigation, When an Action Against, Affecting or on Behalf of the Particular Public Body Has Been Filed and is Pending Before a Court or Administrative Tribunal, or When the Public Body Finds that an Action is Probable or Imminent, in Which Case the Basis for the Finding Shall be Recorded and Entered into the Minutes of the Closed Meeting** and **Section 2(C)(5) of the Illinois Open Meetings Act: (5) the Purchase or Lease of Real Property for the Use of the Public Body, Including Meetings Held for the Purpose of Discussing Whether a Particular Parcel Should be Acquired.** Upon roll call, Trustees voted as follows on the motion:

AYES: 6 – Johnson, Cesario, Ottenheimer, Stein, Bocek, Weidenfeld
NAYS: 0 – None
Motion declared carried.

The Board moved to Executive Session from 7:27 P.M. until 9:06 P.M.

ADJOURNMENT

Moved by Ottenheimer, seconded by Cesario, to adjourn the meeting. Upon voice vote, the motion was unanimously declared carried.

The meeting was adjourned at 9:08 P.M.

_____
Janet M. Sirabian, Village Clerk

APPROVED BY ME THIS ____17th_____DAY OF ____March__ 2025

_____
Village President

DRAFT

AGENDA ITEM SUMMARY

BUFFALO GROVE VILLAGE BOARD

Regular Meeting: March 17, 2025

AGENDA ITEM 3.a.
Approval of Warrant #1379

Contacts

Liaison: Trustee Bocek
Staff: Chris Black

Staff Recommendation

Staff recommends approval.

Recommended Motion

I move to approve Warrant #1379 for an amount of $6,906,342.67.

Summary

Warrant #1379 for an amount of $6,906,342.67.

Strategic Alignment

Guiding Principle

N/A

Goal

N/A

File Attachments

1. Summary Warrant 1379

smart. with heart.
50 Raupp Blvd, Buffalo Grove, IL 60089 847-459-2500 vbg.org

VILLAGE OF BUFFALO GROVE WARRANT #1379
17-Mar-25

General Fund:	**1,826,916.76**
Parking Lot Fund:	**383.81**
Motor Fuel Tax Fund:	**0.00**
Debt Service Fund:	**0.00**
School & Park Donations:	**0.00**
Lake Cook Rd TIF Fund:	**0.00**
Capital Projects-Facilities:	**780,255.88**
Capital Projects-Vehicles/Equipment:	**339,768.15**
Capital Projects-Streets:	**78,963.12**
Retiree Health Savings (RHS):	**63,448.54**
Water Fund:	**661,510.09**
Buffalo Grove Golf Fund:	**17,518.30**
Arboretum Golf Fund:	**239,890.21**
Refuse Service Fund:	**115,836.00**
Information Technology Internal Service Fund:	**138,133.47**
Central Garage Internal Service Fund:	**51,473.52**
Building Maintenance Internal Service Fund:	**163,212.01**
	4,477,309.86
PAYROLL PERIOD ENDING 2/23/2025	**1,317,349.67**
PAYROLL PERIOD ENDING 3/09/2025	**1,111,683.14**
TOTAL WARRANT #1379	**6,906,342.67**

APPROVED FOR PAYMENT BY THE PRESIDENT AND BOARD OF TRUSTEES OF THE VILLAGE OF BUFFALO GROVE, ILLINOIS

Village Clerk

Village President

AGENDA ITEM SUMMARY

BUFFALO GROVE VILLAGE BOARD

Regular Meeting: March 17, 2025

AGENDA ITEM 5.a.
Fire Department Swearing In of Lieutenant Jay Huh

Contacts

Liaison: Trustee Cesario
Staff: Lawrence Kane

Staff Recommendation

Staff recommends presentation.

Recommended Motion

Staff recommends presentation.

Summary

Due to the recent retirement of Lieutenant Jeff Morris, a vacancy has been created for the position of Lieutenant. After the testing process for Lieutenant and his placement on the final Lieutenant's eligibility list dated June 7, 2024, FF/PM Jay Huh has earned the position of Lieutenant and should be sworn in to this new position and issued his badge representing his newly promoted rank.

Strategic Alignment

Guiding Principle

Principle 2: Outstanding Village Services
Principle 3: Plan and Invest in the Future
Principle 4: High Performing Village Team

Goal

Goal 1: Maintained effective village government: fiscally responsible and providing outstanding, responsive services
Goal 3: Strengthened Buffalo Grove community identity and pride

File Attachments

None

smart. with heart.
50 Raupp Blvd, Buffalo Grove, IL 60089 847-459-2500 vbg.org

smart. with heart.
50 Raupp Blvd, Buffalo Grove, IL 60089 847-459-2500 vbg.org

AGENDA ITEM SUMMARY

BUFFALO GROVE VILLAGE BOARD

Regular Meeting: March 17, 2025

AGENDA ITEM 8.a. O-2025-31
Ordinance Authorizing a Development Improvement Agreement with District 214 for the Athletic Field Renovations Phase 2

Contacts

Liaison: Trustee Stein
Staff: Kyle Johnson

Staff Recommendation

Staff recommends approval.

Recommended Motion

I move to approve an ordinance authorizing the execution of a Development Improvement Agreement with District 214 for the Athletic Field Renovations Phase 2.

Summary

District 214 continues to make significant improvements to their Athletic Fields located at 1100 Dundee Road. Through a coordinated plan and effort, District 214 has worked with Engineering and Community Development to plan out Phase I and II in detail with more phases possible in concept. All permit requirements have been met and their contractor is ready to start work.

The Development Improvement Agreement, or DIA, is an agreement between the Developer (District) and the Village and identifies the items to be constructed by the developer on the project site. Typical items include stormwater management, parking lots, and all of the utilities such as water main and sanitary sewer. This DIA was written specifically for the work on the second phase of athletic field work at 1100 Dundee Road and will be held separate of the phase one work.

Strategic Alignment

Guiding Principle

Principle 5: Partnership with Local Districts

Goal

Goal 2: Enhanced, beautiful, safe and sustainable neighborhoods

smart. with heart.
50 Raupp Blvd, Buffalo Grove, IL 60089 847-459-2500 vbg.org

File Attachments

1. DRAFT Ordinance BGHS Field Reno Phase 2
2. DIA BGHS Field Reno Phase 2 - 3.17.25

smart. with heart.
50 Raupp Blvd, Buffalo Grove, IL 60089 847-459-2500 vbg.org

ORDINANCE 2025-xxx

AN ORDINANCE AUTHORIZING A DEVELOPMENT IMPROVEMENT AGREEMENT WITH HIGH SCHOOL DISTRICT 214 FOR ATHLETIC FIELD RENOVATIONS PHASE 2

WHEREAS the Village of Buffalo Grove is a home rule unit pursuant to the Illinois Constitution of 1970; and

WHEREAS the Village seeks to approve a Development Improvement Agreement with High School District 214 for Athletic Field Renovations Phase 2 at Buffalo Grove High School.

NOW THEREFORE BE IT ORDAINED by the President and Board of Trustees of the Village of Buffalo Grove, Cook and Lake Counties, Illinois, as follows:

SECTION 1. The foregoing recitals are hereby adopted and incorporated and made a part of this Ordinance as if fully set forth herein.

SECTION 2. The Village President is authorized to execute a Development Improvement Agreement with High School District 214 for Athletic Field Renovations Phase 2 at Buffalo Grove High School, pending attorney review.

SECTION 3. If any section, paragraph, clause or provision of this Ordinance shall be held invalid, the invalidity thereof shall not affect any other provision of this Ordinance.

SECTION 4. This Ordinance shall be in full force and effect from and after its passage and approval and shall not be codified.

AYES: _____
NAYES: _____
ABSENT: _____
PASSED: _____, 2025
APPROVED: _____, 2025
PUBLISHED: _____, 2025

ATTEST:

_____
Janet M. Sirabian, Village Clerk

APPROVED:

_____
Eric N. Smith, Village President

DRAFT

smart. with heart.
50 Raupp Blvd, Buffalo Grove, IL 60089 847-459-2500 vbg.org

Buffalo Grove High School Athletic Field Renovations Phase 2
Development Name

DEVELOPMENT IMPROVEMENT AGREEMENT

THIS AGREEMENT ("Agreement"), made and entered into as of this 17th day of March 2025 by and between the VILLAGE OF BUFFALO GROVE, an Illinois Municipal Corporation, and having its office at Village Hall, 50 Raupp Boulevard, Buffalo Grove, Illinois (hereinafter called "Village"), and the Board of Education of Township High School District 214, Cook County, Illinois (hereinafter called "Developer").

WITNESSETH:

WHEREAS, Developer desires to improve the real property described in Exhibit "A" attached hereto and made a part hereof (the "Property"), and in compliance with the Village's Development Ordinance, Developer has submitted to the Village certain (i) plans prepared by STR Partners, LLC, who have hired registered professional engineers (the "Site Plan"), which Preliminary Plans were approved by the Village pursuant to Ordinance No. 2024-0 and described in more detail in Exhibit "C" attached hereto and made a part hereof (the "Site Improvement Plans" and together with the Site Plan, the "Plans"); and,

WHEREAS, the Village is willing to approve said Plans to the extent it has oversight authority under Illinois law, provided that this Agreement is executed to assure the Village as to the completion of certain site improvements.

NOW, THEREFORE, it is mutually agreed as follows:

1. The Developer is a governmental entity in the Village authorized under the Illinois School Code to improve facilities under its jurisdiction. The School District 214 shall furnish, or cause to be furnished, at their own cost and expense, all the necessary material, labor, and equipment to complete the improvements listed on Exhibit "B" attached hereto, and all other site improvements not specifically set forth, which are required by applicable ordinances or agreements (collectively, the "Improvements"), all in a good and workmanlike manner and in accordance with all pertinent ordinances and regulations of the Village and in accordance with the Plans (including any subsequent revisions requested by the Developer and approved in writing by the Village pursuant to the Village's Development Ordinance).

2. Attached hereto as Exhibit "D" is a complete cost estimate for the construction of the

improvement described in Exhibit “B” hereto.

3. All site work shall be subject to inspection by and the approval of the Village Engineer. It is agreed that the contractors who are engaged to construct the Improvements are to be approved by the Village Engineer and that such approval will not be unreasonably withheld.

4. The Developer has paid or will pay the Village a Review and Inspection Fee, as required by Ordinance. It is understood that said fee is based on the amount of the contracts or cost estimate for those items in Exhibit “B”.

5. Prior to the time the Developer or any of its contractors begin any of the work provided for herein, the Developer, and/or its contractors shall furnish the Village with evidence of insurance covering their employees in such amounts and coverage as is acceptable to the Village. Nothing herein shall waive any immunities the Village May assert in response to or defense of any such claim.

In addition, by its execution of this Agreement, the Developer agrees, to the extent authorized under Village Code, to protect, indemnify, save and hold harmless, and defend the Village and its employees, officials, and agents, against any and all claims, costs, causes, actions, and expenses, including but not limited to reasonable attorney's fees incurred by reason of a lawsuit or claim for damages or compensation arising in favor of any person, corporation or other entity, including the employees or officers or independent contractors or sub-contractors of the Developer or the Village, on account of personal injuries or death, or damages to property occurring, growing out of, incident to, or resulting directly or indirectly, from the performance of the work of the Developer, independent contractors or sub-contractors or their officers, agents, or employees. The Developer shall have no liability or damages for the costs incident thereto to the extent caused by the sole negligence or intentional misconduct of the Village, its independent contractors or sub-contractors or their officers, agents, or employees.

6. Subject to Force Majeure (as defined herein), Developer shall cause the Improvements to be completed within twenty-four (24) months following the date of this Agreement (except any Improvements for which specified time limits are noted on the Plans, which shall be completed within the specified time limits shown on the Plans). “Force Majeure” as used herein shall mean a delay in Developer’s performance

hereunder caused by a strike or labor problem, energy shortage, governmental pre-emption or prescription, national emergency, or any other cause of any kind beyond the reasonable control of Developer.

7. The Developer, for a period of one year beyond formal acceptance by the Village of any Improvement, described in Exhibit "B" hereof, shall be responsible for maintenance, repairs and corrections to such Improvements which may be required due to failures or on account of faulty construction or due to the Developer's negligence and/or its contractors' negligence.

8. N/A

9. The Developer acknowledges that they are responsible for the proper control of weeds, grass, refuse, and junk on all property which he owns within the Village in accordance with Chapter 8.32 of the Buffalo Grove Municipal Code, but only to the extent required by Illinois law.

If the Developer fails to perform its maintenance responsibilities established in either this paragraph or Chapter 8.32, the Village may provide a written notice to the Developer of the improper maintenance condition. If proper maintenance is not completed within ten (10) days after the Developer is provided this notice, the Village may perform the maintenance and may issue a Stop Work Order or also may revoke all permits which the Developer has been granted.

10. The Developer agrees that no Improvements constructed in conjunction with this project are sized or located in such a way as to warrant any recapture payment to the Developer pursuant to any applicable previous agreements.

11. This Agreement shall automatically terminate and be of no further force and effect with respect to Developer or the Property upon the expiration of the one-year maintenance period, and upon such termination the parties hereto shall have no further obligations to the other. The period commencing on the date set forth in the preamble to this Agreement and expiring on the expiration of the one-year maintenance period is referred to herein as the "Term".

12. This Agreement and the obligations contained herein are in addition to, and not in limitation of, all other agreements between the Parties hereto including, without limitation, the Preliminary Plan dated 2-13-24, and the obligations contained therein.

13. Neither party shall cause this Agreement (or any memorandum hereof) to be recorded against the Property.

15. Neither party shall assign this Agreement or any of its terms without the prior, express and written consent of the other party. Furthermore, no assignment of the Developer's obligations shall be effective unless and until the Village approves the language of any proposed assignment and substitute security in the amounts required by this Agreement.

IN WITNESS WHEREOF, the Village has caused this Agreement to be executed, as has the Developer, all as of the date first above written.

VILLAGE OF BUFFALO GROVE, an Illinois Municipal Corporation

By _____

Village President

DEVELOPER:

Board of Education of Township High School District 214
Cook County
2121 South Goebbert Road
Arlington Heights, IL 60005

By: _____

Name: _____

Title: _____

Buffalo Grove High School Athletic Field Renovations Phase 2
(Development Name)

DEVELOPMENT IMPROVEMENT AGREEMENT

EXHIBIT A

LEGAL DESCRIPTION

N/A

KNOWN AS: **1100 DUNDEE RD, BUFFALO GROVE, ILLINOIS**

PERMANENT INDEX NUMBER: 03-05-302-003 & 03-05-302-002

AREA = ___ SQ. FT. OR ___ ACRES

Buffalo Grove High School Athletic Field Renovations Phase 2
(Development Name)

DEVELOPMENT IMPROVEMENT AGREEMENT

EXHIBIT B

All improvements set forth and depicted in the Plans, both public and private, including (to the extent applicable) earthwork, grading, roads or streets, parking lots, areas and/or parking facilities, sidewalks, sanitary and storm sewers, water main, drainage and storm water detention facilities, site grading, street lighting, landscaping, survey monuments and benchmarks.

Buffalo Grove High School Athletic Field Renovations Phase 2
(Development Name)

DEVELOPMENT IMPROVEMENT AGREEMENT

EXHIBIT C

Final Engineering and Landscaping Plans prepared by: STR Partner Partners, LLC

Entitled: D214 BGHS Athletic Field Renovations Phase 2

Consisting of: 26 sheet(s), last revised 1/3/2025

(see following pages)

Buffalo Grove High School Athletic Field Renovations Phase 2
(Development Name)

DEVELOPMENT IMPROVEMENT AGREEMENT

EXHIBIT D

Engineers Opinion of Probable Costs

(see following pages)

ENGINEER'S OPINION OF PROBABLE COST

D214 Buffalo Grove High School Athletic Fields - Phase 2

GEWALT HAMILTON ASSOCIATES, INC.
CONSULTING ENGINEERS
625 Forest Edge Drive, Vernon Hills, IL 60061
TEL 847.478.9700 ■ FAX 847.478.9701
www.gha-engineers.com

Township High School District 214
GHA Project #5651.145

Prepared by: David Guerrero, Jr
Checked by: Don Matthews

Date: November 21, 2024

Village of Buffalo Grove Engineering Department EOPC

Buffalo Grove High School Athletic Fields - Phase 2

SP*	Pay Item	Description	Quantity	Unit	Value
	Berger				
		Earthwork and Demolition / Site Utilities	1.0	LS	$4,194,000.00
	Chadwick				
		Asphalt and Concrete Paving	1.0	LS	$455,550.00
	Breezy Hill				
		Landscaping	1.0	LS	$527,900.00
					$5,177,450.00
					$5,177,450.00

Detailed Description:
Construction value determined by Construction Manager based on awarded bids

	EOPC	$	5,177,450.00		
	10% contingency	$	5,695,195.00		
	108%	$	6,109,391.00	LOC amount	
	Engineering Review Fee	**$**	**51,775.00**	Modified per Ordinance	
	~~Cash Deposit~~	~~$~~	~~61,093.00~~	~~**or $5,000 Minimum**~~	~~**$ 5,000.00**~~
~~1~~	~~LOC Amount~~	~~$~~	~~6,048,298.00~~		

AGENDA ITEM SUMMARY

BUFFALO GROVE VILLAGE BOARD

Regular Meeting: March 17, 2025

AGENDA ITEM 8.b. O-2025-32
Ordinance Authorizing the Certificate of Initial Acceptance for Driven Car Wash

Contacts

Liaison: Trustee Stein
Staff: Kyle Johnson

Staff Recommendation

Staff recommends approval.

Recommended Motion

I move to approve an ordinance authorizing the execution of the Certificate of Initial Acceptance for Driven Car Wash.

Summary

The Developer of Driven Car Wash, located at 301 Milwaukee Ave., has completed the required improvements, and is recommended to be moved to the one-year maintenance period beginning March 17th, 2025. Driven Car Wash includes a drive through car wash, two access points on Milwaukee Ave. and the associated infrastructure. Staff recommends approval of the Certificate of Initial Acceptance for Driven Car Wash.

Strategic Alignment

Guiding Principle

Principle 3: Plan and Invest in the Future

Goal

Goal 2: Enhanced, beautiful, safe and sustainable neighborhoods

File Attachments

1. Draft Ordinance - Driven Car Wash CIA 3-17-25
2. Certificate of Initial Acceptance - Driven Car Wash

smart. with heart.
50 Raupp Blvd, Buffalo Grove, IL 60089 847-459-2500 vbg.org

ORDINANCE 2025-xxx

AN ORDINANCE AUTHORIZING EXECUTION OF THE CERTIFICATE OF INITIAL ACCEPTANCE FOR DRIVEN CAR WASH

WHEREAS the Village of Buffalo Grove is a home rule unit pursuant to the Illinois Constitution of 1970; and

WHEREAS the Village seeks to execute a Certificate of Initial Acceptance with Driven Car Wash for Driven Car Wash located at 301 Milwaukee Avenue in the Village of Buffalo Grove,

NOW THEREFORE BE IT ORDAINED by the President and Board of Trustees of the Village of Buffalo Grove, Cook and Lake Counties, Illinois, as follows:

SECTION 1. The foregoing recitals are hereby adopted and incorporated and made a part of this Ordinance as if fully set forth herein.

SECTION 2. The Village President is authorized to execute a Certificate of Initial Acceptance with Driven Car Wash for Driven Car Wash located at 301 Milwaukee Avenue in the Village of Buffalo Grove,

SECTION 3. If any section, paragraph, clause or provision of this Ordinance shall be held invalid, the invalidity thereof shall not affect any other provision of this Ordinance.

SECTION 4. This Ordinance shall be in full force and effect from and after its passage and approval and shall not be codified.

AYES: _____
NAYES: _____
ABSENT: _____
PASSED: _____, 2025
APPROVED: _____, 2025
PUBLISHED: _____, 2025

ATTEST:

_____
Janet M. Sirabian, Village Clerk

APPROVED:

_____
Eric N. Smith, Village President

DRAFT

smart. with heart.
50 Raupp Blvd, Buffalo Grove, IL 60089 847-459-2500 vbg.org

VILLAGE OF BUFFALO GROVE
CERTIFICATE OF INITIAL ACCEPTANCE AND APPROVAL

SUBMIT COMPLETED FORM ALONG WITH ONE MYLAR SET OF "AS-BUILT" PLANS. **ALL INFORMATION MUST BE TYPED.**

SUBDIVISION Columbian Gardens Unit 2 DEVELOPER Driven Car Wash

UNIT NO. _____ LOCATION 301 Milwaukee Avenue, Buffalo Grove 60089

Dedicated Public Right of Way (if any): _____

Description of Public Improvements: Sidewalk, Sanitary Sewer, Storm Sewer and Watermain

Description of Private Improvements: Buildings, parking lot & entrance improvements, private road, and stormwater management infrastructure.

One-Year Maintenance Guarantee: Letter of Credit

DESIGN ENGINEER'S CERTIFICATION

To the best of my knowledge and belief, the construction of the improvements described above have been completed in accordance with the approved plans and specifications, and items indicated on the Final Punch List dated , which was prepared by the Village of Buffalo Grove.

_____
Engineer's Signature & Seal

Seal

OWNER'S/DEVELOPER'S CERTIFICATION

All improvements including soil erosion and sediment control measures have been completed and are hereby presented for initial Acceptance and Conveyance to the Village of Buffalo Grove. I also herewith acknowledge my responsibility to provide a one-year Guarantee to cover workmanship, materials, and maintenance for all improvements referred to herein.

The undersigned Owner does hereby convey and deliver to the Village of Buffalo Grove the foregoing listed public improvements and does hereby covenant that said improvements are free of all encumbrances and does hereby warrant and will defend the same against the claims and demands of all persons.

_____
Owner's Signature

_____
Owner's Name

_____
Company Name

MUNICIPAL INSPECTOR'S CERTIFICATION

I/we hereby certify that I/we have regularly inspected the above described unit(s) of the above described Subdivision during the progress of construction and to the best of my/our knowledge; the work has been completed in conformance with the approved plans and specifications.

_____ _____
Municipal Inspector Date

VILLAGE ENGINEER'S CERTIFICATION

I hereby certify that the Division of Engineering Services has reviewed the above described unit(s) of the above described Subdivision and find them in conformance with the applicable Village ordinances, codes, and agreements.

_____ _____
Village Engineer Date

PUBLIC WORK'S CERTIFICATION

I hereby certify that the Department of Public Works has inspected all public improvements described above and find them in proper condition for acceptance for maintenance by this Department.

_____ _____
Director of Public Works Date

VILLAGE MANAGER'S CERTIFICATION

I hereby certify that all applicable Village ordinances, codes, and special agreements have been complied with by the Owner of the above described Subdivision.

_____ _____
Village Manager Date

ACCEPTANCE OF PUBLIC IMPROVEMENTS

The Village of Buffalo Grove does hereby approve and accept for ownership the above described public improvements subject to the one-year Guarantee by the Developer covering all materials, workmanship, and maintenance.

Village Board of Trustees Action: _____ _____
Date Page No.

_____ _____
Village President Date

AGENDA ITEM SUMMARY

BUFFALO GROVE VILLAGE BOARD

Regular Meeting: March 17, 2025

AGENDA ITEM 8.c. O-2025-33
Ordinance Authorizing the Certificate of Initial Acceptance for Lazy Dog

Contacts

Liaison: Trustee Stein
Staff: Kyle Johnson

Staff Recommendation

Staff recommends approval.

Recommended Motion

I move to approve an ordinance authorizing the execution of the Certificate of Initial Acceptance for Lazy Dog.

Summary

The Developer of Lazy Dog, located at 51 McHenry Rd., has completed the required improvements, and is recommended to be moved to the one-year maintenance period beginning March 17th, 2025. Lazy Dog includes a restaurant, a parking lot and the associated infrastructure. Staff recommends approval of the Certificate of Initial Acceptance for Lazy Dog.

Strategic Alignment

Guiding Principle

Principle 3: Plan and Invest in the Future

Goal

Goal 2: Enhanced, beautiful, safe and sustainable neighborhoods

File Attachments

1. Draft Ordinance - Lazy Dog CIA 3-17-25
2. Certificate of Initial Acceptance - Lazy Dog

smart. with heart.
50 Raupp Blvd, Buffalo Grove, IL 60089 847-459-2500 vbg.org

ORDINANCE 2025-xxx

AN ORDINANCE AUTHORIZING EXECUTION OF THE CERTIFICATE OF INITIAL ACCEPTANCE FOR LAZY DOG

WHEREAS the Village of Buffalo Grove is a home rule unit pursuant to the Illinois Constitution of 1970; and

WHEREAS the Village seeks to execute a Certificate of Initial Acceptance with Lazy Dog Restaurants LLC. for Lazy Dog located at 51 McHenry Road in the Village of Buffalo Grove.

NOW THEREFORE BE IT ORDAINED by the President and Board of Trustees of the Village of Buffalo Grove, Cook and Lake Counties, Illinois, as follows:

SECTION 1. The foregoing recitals are hereby adopted and incorporated and made a part of this Ordinance as if fully set forth herein.

SECTION 2. The Village President is authorized to execute a Certificate of Initial Acceptance with Lazy Dog Restaurants LLC. for Lazy Dog located at 51 McHenry Road in the Village of Buffalo Grove,

SECTION 3. If any section, paragraph, clause or provision of this Ordinance shall be held invalid, the invalidity thereof shall not affect any other provision of this Ordinance.

SECTION 4. This Ordinance shall be in full force and effect from and after its passage and approval and shall not be codified.

AYES: _____
NAYES: _____
ABSENT: _____
PASSED: _____, 2025
APPROVED: _____, 2025
PUBLISHED: _____, 2025

ATTEST:

_____
Janet M. Sirabian, Village Clerk

APPROVED:

_____
Eric N. Smith, Village President

DRAFT

smart. with heart.
50 Raupp Blvd, Buffalo Grove, IL 60089 847-459-2500 vbg.org

VILLAGE OF BUFFALO GROVE
CERTIFICATE OF INITIAL ACCEPTANCE AND APPROVAL

SUBMIT COMPLETED FORM ALONG WITH ONE MYLAR SET OF "AS-BUILT" PLANS. **ALL INFORMATION MUST BE TYPED.**

SUBDIVISION Buffalo Grove Center Resub. DEVELOPER Lazy Dog Restaurants, LLC

UNIT NO. _____ LOCATION 51 McHenry Rd. Buffalo Grove, IL 60089

Dedicated Public Right of Way (if any): _____

Description of Public Improvements: Sidewalk, parkway restoration, sanitary/storm sewer & water main modifications

Description of Private Improvements: Buildings, parking lot & entrance improvements, private road, and stormwater management infrastructure.

One-Year Maintenance Guarantee: Letter of Credit

DESIGN ENGINEER'S CERTIFICATION

To the best of my knowledge and belief, the construction of the improvements described above have been completed in accordance with the approved plans and specifications, and items indicated on the Final Punch List dated: January 27, 2025 which was prepared by the Village of Buffalo Grove.

_____
Engineer's Signature & Seal

Seal

OWNER'S/DEVELOPER'S CERTIFICATION

All improvements including soil erosion and sediment control measures have been completed and are hereby presented for initial Acceptance and Conveyance to the Village of Buffalo Grove. I also herewith acknowledge my responsibility to provide a one-year Guarantee to cover workmanship, materials, and maintenance for all improvements referred to herein.

The undersigned Owner does hereby convey and deliver to the Village of Buffalo Grove the foregoing listed public improvements and does hereby covenant that said improvements are free of all encumbrances and does hereby warrant and will defend the same against the claims and demands of all persons.

_____
Owner's Signature

_____
Owner's Name

_____
Company Name

MUNICIPAL INSPECTOR'S CERTIFICATION

I/we hereby certify that I/we have regularly inspected the above described unit(s) of the above described Subdivision during the progress of construction and to the best of my/our knowledge; the work has been completed in conformance with the approved plans and specifications.

_____ _____
Municipal Inspector Date

VILLAGE ENGINEER'S CERTIFICATION

I hereby certify that the Division of Engineering Services has reviewed the above described unit(s) of the above described Subdivision and find them in conformance with the applicable Village ordinances, codes, and agreements.

_____ _____
Village Engineer Date

PUBLIC WORK'S CERTIFICATION

I hereby certify that the Department of Public Works has inspected all public improvements described above and find them in proper condition for acceptance for maintenance by this Department.

_____ _____
Director of Public Works Date

VILLAGE MANAGER'S CERTIFICATION

I hereby certify that all applicable Village ordinances, codes, and special agreements have been complied with by the Owner of the above described Subdivision.

_____ _____
Village Manager Date

ACCEPTANCE OF PUBLIC IMPROVEMENTS

The Village of Buffalo Grove does hereby approve and accept for ownership the above described public improvements subject to the one-year Guarantee by the Developer covering all materials, workmanship, and maintenance.

Village Board of Trustees Action: _____ _____
Date Page No.

_____ _____
Village President Date

AGENDA ITEM SUMMARY

BUFFALO GROVE VILLAGE BOARD

Regular Meeting: March 17, 2025

AGENDA ITEM 8.d. O-2025-34
Ordinance Authorizing a Contract with SKC Construction, Inc for the 2025 Cracksealing Project

Contacts

Liaison: Trustee Stein
Staff: Kyle Johnson

Staff Recommendation

Staff recommends approval.

Recommended Motion

I move to approve an Ordinance authorizing the execution of a Contract with SKC Construction, Inc. for the 2025 Cracksealing Project, pending final review by the Village Attorney.

Summary

Recommendation

Staff recommends that the Village Board award the contract to SKC Construction, Inc. a price not to exceed $92,114.25 because the firm is the lowest qualified bidder for the work proposed. Due to the size and scope of the project, staff recommends a contingency fund be created and controlled by the Village in the amount of $8,374.02 (10.0% of the project cost). As bids came in below the engineers estimate Public Works staff will consult with the Village Manager prior to exceeding the low bid price of $83,740.23. This project is funded by Illinois Motor Fuel Tax Funds (MFT).

Background

The 2025 Cracksealing Project was advertised for bids and opened on March 10, 2025, where 2 qualifying bids were received. The lowest qualified base bid was in the amount of $33,066.15 from SKC Construction, Inc. SKC Construction, Inc also supplied qualified alternate bids in the amount of $31,195.41 and $19,478.67, which makes the overall bid value $83,740.23. The project includes routing and filling of cracks that are present or predicted along streets that have been resurfaced in recent years. Cracksealing is a form of early preventative maintenance has proven to significantly extend the life cycle of new payments at low costs.

Attached is a copy of the Tabulation of Bids for the project indicating the lowest total qualified bid of $83,740.23. Also demonstrated in the attachment is an engineer's estimate of

smart. with heart.
50 Raupp Blvd, Buffalo Grove, IL 60089 847-459-2500 vbg.org

$91,854.00. All work associated with this project is expected to be completed by mid-May. All draft contract documentation can be found here.

Strategic Alignment

Guiding Principle

Principle 3: Plan and Invest in the Future

Goal

Goal 1: Maintained effective village government: fiscally responsible and providing outstanding, responsive services

File Attachments

1. DRAFT Ordinance - 2025 Cracksealing Award
2. Bid Recommendation - Cracksealing
3. Bid Tabulation - Cracksealing

smart. with heart.
50 Raupp Blvd, Buffalo Grove, IL 60089 847-459-2500 vbg.org

ORDINANCE 2025-xxx

AN ORDINANCE AUTHORIZING THE EXECUTION OF A CONTRACT WITH SKC CONSTRUCTION, INC. FOR THE 2025 CRACKSEALING PROJECT

WHEREAS the Village of Buffalo Grove is a home rule unit pursuant to the Illinois Constitution of 1970; and

WHEREAS the Village seeks to enter into a contract with SKC Construction, Inc. for the 2025 Cracksealing Project.

NOW THEREFORE BE IT ORDAINED by the President and Board of Trustees of the Village of Buffalo Grove, Cook and Lake Counties, Illinois, as follows:

SECTION 1. The foregoing recitals are hereby adopted and incorporated and made a part of this Ordinance as if fully set forth herein.

SECTION 2. The Village President is authorized to execute a contract with SKC Construction, Inc. for the 2025 Cracksealing Project at a price not to exceed $92,114.25, pending attorney review.

SECTION 3. If any section, paragraph, clause or provision of this Ordinance shall be held invalid, the invalidity thereof shall not affect any other provision of this Ordinance.

SECTION 4. This Ordinance shall be in full force and effect from and after its passage and approval and shall not be codified.

AYES: _____
NAYES: _____
ABSENT: _____
PASSED: _____, 2025
APPROVED: _____, 2025
PUBLISHED: _____, 2025

ATTEST:

_____
Janet M. Sirabian, Village Clerk

APPROVED:

_____
Eric N. Smith, Village President

DRAFT

smart. with heart.
50 Raupp Blvd, Buffalo Grove, IL 60089 847-459-2500 vbg.org

GEWALT HAMILTON ASSOCIATES, INC.
CONSULTING ENGINEERS
625 Forest Edge Drive, Vernon Hills, IL 60061
Tel 847.478.9700 ▪ Fax 847.478.9701
www.gha-engineers.com

March 11, 2025

Mr. Adam Dow
Civil Engineer II
Village of Buffalo Grove
1650 Leider Lane
Buffalo Grove, Illinois 60089

Re: 2025 Cracksealing Project
VoBG-2025-03
Bid Results and Recommendation for Award

Dear Mr. Dow:

On Monday, March 10, 2025, bid proposals for the above referenced project were received, opened, and publicly read aloud via a Microsoft Teams video conference. This project includes crack routing and sealing of the pavement on various street segments throughout the Village limits.

As directed, the work considered was separated into a 'base bid' and two 'alternates'. Thus, three separate bid schedules were received from each contractor. Most of the proposed work was included in the base bid, and additional street segments were included in both alternate 01 and alternate 02.

Bid documents were solicited and available to contractors on the Village's website, and bids were received by two (2) contractors. As-read, the combined bid amounts ranged from $83,740.23 to $85,833.90; the Engineer's Opinion of Probable Cost (EOPC) was $91,854.00. The as-read low bid of $83,740.23 was received from SKC Construction, Inc. of West Dundee, Illinois. The bids for the base bid ranged from $33,066.15 to $35,665.50; the EOPC was $36,270.00. The bids for alternate 01 ranged from $31,195.41 to $31,176.40; the EOPC was $34,218.00. The bids for alternate 02 ranged from $19,478.67 to $18,992.00; the EOPC was $21,366.00.

SKC Construction, Inc. is an IDOT prequalified firm and has the experience and means to perform the work in accordance with the plans and specifications.

We recommend that the Village Board authorize the award of a construction contract for the 2025 Cracksealing Project to SKC Construction, Inc. in the amount of $83,740.23. This includes the award of the base bid, alternate 01, and alternate 02.

If you have any questions or require additional information regarding the above, please do not hesitate to contact me at (847) 344-5719 or by email at ldeferville@gha-engineers.com.

Sincerely,
GEWALT HAMILTON ASSOCIATES, INC.

Lucas Deferville
Assistant Director of Construction & Survey Services

Encl.: Bid Summary

CC: Tom Wisniewski – Village of Buffalo Grove
Kyle Johnson, PE, CFM – Village of Buffalo Grove
Briget Schwab, PE – Village of Buffalo Grove
Leo Morand, PE – Gewalt Hamilton Associates, Inc.

Client: Village of Buffalo Grove

Project: 2025 Cracksealing Project (VoBG-2025-03)

GHA Project No: 4798.083

Project Manager: Lucas Deferville

Bid Opening Date: 3/10/2025

Bid Opening Location: Virtual

				Engineer's Opinion of Probable Cost		***BID TABULATION***			
						SKC Construction, Inc. West Dundee, IL		*Denler, Inc. Joliet, IL*	
Item No.	**Description**	**Quantity**	**Unit**	**Unit Price**	**Total**	**Unit Price**	**Total**	**Unit Price**	**Total**
-	Crack Routing (Pavement) and Filling	20,150.0	LBS	$1.80	$36,270.00	$1.641	$33,066.15	$1.770	$35,665.50
			Total Base Bid:		**$36,270.00**		**$33,066.15**		**$35,665.50**
-	Crack Routing (Pavement) and Filling	19,010.0	LBS	$1.80	$34,218.00	$1.641	$31,195.41	$1.640	$31,176.40
			Total Alternate 01 Bid:		**$34,218.00**		**$31,195.41**		**$31,176.40**
-	Crack Routing (Pavement) and Filling	11,870.0	LBS	$1.80	$21,366.00	$1.641	$19,478.67	$1.600	$18,992.00
			Total Alternate 02 Bid:		**$21,366.00**		**$19,478.67**		**$18,992.00**
			Total Bid:		**$91,854.00**		**$83,740.23**		**$85,833.90**

AGENDA ITEM SUMMARY

BUFFALO GROVE VILLAGE BOARD

Regular Meeting: March 17, 2025

AGENDA ITEM 8.e. O-2025-35
Ordinance Authorizing a Contract with Denler, Inc. for the 2025 Parking Lot Improvements Project

Contacts

Liaison: Trustee Stein
Staff: Kyle Johnson

Staff Recommendation

Staff recommends approval.

Recommended Motion

I move to approve an Ordinance authorizing the execution of a Contract with Denler, Inc. for the 2025 Parking Lot Improvements Project, pending final review by the Village Attorney.

Summary

Recommendation

Staff recommends that the Village Board award the contract to Denler, Inc. a price not to exceed $80,026.87 because the firm is the lowest qualified bidder for the work proposed. Due to the size and scope of the project, staff recommends a contingency fund be created and controlled by the Village in the amount of $7,275.17 (10.0% of the project cost). As bids came in below the engineers estimate Public Works staff will consult with the Village Manager prior to exceeding the low bid price of $72,751.70. This project is funded by Illinois Motor Fuel Tax Funds (MFT).

Background

The 2025 Parking Lot Improvements Project was advertised for bids and opened on March 10, 2025, where 2 qualifying bids were received. The lowest qualified base bid was in the amount of $13,551.91 from Denler, Inc. Denler, Inc. also supplied qualified alternate bids in the amount of $31,227.15, $27,130.45 and $17,259.88, which makes the overall bid value $72,751.70. The project includes sealcoating and re-striping the Buffalo Grove Golf Course West under the base bid, the Arboretum Golf Club under bid alternate one, and Municipal Campus under bid alternate two. Sealcoating is a maintenance activity that provides a protective layer to asphalt surfaces and extends the life of the pavement. In advance of the sealcoating operation starting at the Municipal Campus lot, there will be several locations requiring pavement patching which will be coordinated under the Pavement Patching contract.

smart. with heart.
50 Raupp Blvd, Buffalo Grove, IL 60089 847-459-2500 vbg.org

Attached is a copy of the Tabulation of Bids for the project indicating the lowest total qualified bid of $72,751.70. Also demonstrated in the attachment is an engineer's estimate of $94,806.60. All work associated with this project is expected to be completed by mid-May. All draft contract documentation can be found here.

Strategic Alignment

Guiding Principle

Principle 3: Plan and Invest in the Future

Goal

Goal 1: Maintained effective village government: fiscally responsible and providing outstanding, responsive services

File Attachments

1. DRAFT Ordinance - 2025 Parking Lot Improvements
2. Bid Recommendation & Bid Summary - Parking Lots

smart. with heart.
50 Raupp Blvd, Buffalo Grove, IL 60089 847-459-2500 vbg.org

ORDINANCE 2025-xxx

AN ORDINANCE AUTHORIZING A CONTRACT WITH DENLER, INC. FOR THE 2025 PARKING LOT IMPROVEMENTS PROJECT

WHEREAS the Village of Buffalo Grove is a home rule unit pursuant to the Illinois Constitution of 1970; and

WHEREAS the Village seeks to enter into a contract with Denler, Inc. for the 2025 Parking Lot Improvements.

NOW THEREFORE BE IT ORDAINED by the President and Board of Trustees of the Village of Buffalo Grove, Cook and Lake Counties, Illinois, as follows:

SECTION 1. The foregoing recitals are hereby adopted and incorporated and made a part of this Ordinance as if fully set forth herein.

SECTION 2. The Village President is authorized to execute a contract with Denler, Inc. for the 2025 Parking Lot Improvements at a price not to exceed $80,026.87, pending attorney review.

SECTION 3. If any section, paragraph, clause or provision of this Ordinance shall be held invalid, the invalidity thereof shall not affect any other provision of this Ordinance.

SECTION 4. This Ordinance shall be in full force and effect from and after its passage and approval and shall not be codified.

AYES: _____
NAYES: _____
ABSENT: _____
PASSED: _____, 2025
APPROVED: _____, 2025
PUBLISHED: _____, 2025

ATTEST:

_____
Janet M. Sirabian, Village Clerk

APPROVED:

_____
Eric N. Smith, Village President

DRAFT

smart. with heart.
50 Raupp Blvd, Buffalo Grove, IL 60089 847-459-2500 vbg.org

GEWALT HAMILTON ASSOCIATES, INC.
CONSULTING ENGINEERS
625 Forest Edge Drive, Vernon Hills, IL 60061
Tel 847.478.9700 ■ Fax 847.478.9701
www.gha-engineers.com

March 11, 2025

Mr. Adam Dow
Civil Engineer II
Village of Buffalo Grove
1650 Leider Lane
Buffalo Grove, Illinois 60089

Re: 2025 Parking Lot Improvements
VoBG-2025-04
Bid Results and Recommendation for Award

Dear Mr. Dow:

On Monday, March 10, 2025, bid proposals for the above referenced project were received, opened, and publicly read aloud via a Microsoft Teams video conference. This project includes seal coating and new pavement markings at various Village and Park District owned and maintained parking lots.

As directed, the work considered was separated into a 'base bid' and three 'alternates'. Thus, four separate bid schedules were received from each contractor. By breaking these out, the Village can be selective based on their budget. Alternate 03 includes Buffalo Grove Park District parking lots.

Bid documents were solicited and available to contractors on the Village's website, and bids were received by two (2) contractors. As-read, the combined bid amounts ranged from $72,751.70 to $94,976.04; the Engineer's Opinion of Probable Cost (EOPC) was $94,806.60. The as-read low bid of $72,751.70 was received from Denler, Inc. of Joliet, Illinois. The bids for the base bid ranged from $13,551.91 to $20,832.45; the EOPC was $19,189.13. The bids for alternate 01 ranged from $23,480.99 to $30,258.08; the EOPC was $31,227.15. The bids for alternate 02 ranged from $21,608.65 to $25,800.17; the EOPC was $27,130.45. The bids for alternate 03 ranged from $14,110.15 to $18,087.36; the EOPC was $17,259.88.

Denler, Inc. is an IDOT prequalified firm and has the experience and means to perform the work in accordance with the plans and specifications.

We recommend that the Village Board authorize the award of a construction contract for the 2025 Parking Lot Improvements project to Denler, Inc. in the amount of $72,751.70. This includes the award of the base bid, alternate 01, alternate 02, and alternate 03.

If you have any questions or require additional information regarding the above, please do not hesitate to contact me at (847) 344-5719 or by email at ldeferville@gha-engineers.com.

Sincerely,
GEWALT HAMILTON ASSOCIATES, INC.

Lucas Deferville
Assistant Director of Construction & Survey Services

Encl.: Bid Summary

CC: Tom Wisniewski – Village of Buffalo Grove
Kyle Johnson, PE, CFM – Village of Buffalo Grove
Briget Schwab, PE – Village of Buffalo Grove
Leo Morand, PE – Gewalt Hamilton Associates, Inc.

Client: Village of Buffalo Grove

Project: 2025 Parking Lot Improvements (VoBG-2025-04)

GHA Project No: 4798.083

Project Manager: Lucas Deferville

Bid Opening Date: 3/10/2025

Bid Opening Location: Virtual

				Engineer's Opinion of Probable Cost		***BID TABULATION***			
						Denler, Inc. Joliet, IL		*Everlast Blacktop, Inc. Elgin, IL*	
Item No.	**Description**	**Quantity**	**Unit**	**Unit Price**	**Total**	**Unit Price**	**Total**	**Unit Price**	**Total**
1	Thermoplastic Pavement Marking - Letters and Symbols	15.5	SF	$5.25	$81.38	$10.00	$155.00	$11.25	$174.38
2	Thermoplastic Pavement Marking - Line 4"	3,785.0	FT	$0.75	$2,838.75	$0.75	$2,838.75	$2.82	$10,673.70
3	Thermoplastic Pavement Marking - Line 24"	14.0	FT	$5.25	$73.50	$5.00	$70.00	$13.50	$189.00
4	Seal Coat (Asphalt Emulsion)	6,370.0	SY	$2.15	$13,695.50	$1.568	$9,988.16	$1.35	$8,599.50
5	Mobilization	1.0	LS	$1,500.00	$1,500.00	$250.00	$250.00	$589.10	$589.10
6	Traffic Control and Protection, (Special)	1.0	LS	$1,000.00	$1,000.00	$250.00	$250.00	$606.77	$606.77
			Total Base Bid:		**$19,189.13**		**$13,551.91**		**$20,832.45**
1	Thermoplastic Pavement Marking - Letters and Symbols	18.6	SF	$5.25	$97.65	$10.00	$186.00	$11.25	$209.25
2	Thermoplastic Pavement Marking - Line 4"	4,520.0	FT	$0.75	$3,390.00	$0.75	$3,390.00	$2.82	$12,746.40
3	Seal Coat (Asphalt Emulsion)	11,530.0	SY	$2.15	$24,789.50	$1.683	$19,404.99	$1.35	$15,565.50
4	Mobilization	1.0	LS	$1,700.00	$1,700.00	$250.00	$250.00	$855.63	$855.63
5	Traffic Control and Protection, (Special)	1.0	LS	$1,250.00	$1,250.00	$250.00	$250.00	$881.30	$881.30
			Total Alternate 01 Bid:		**$31,227.15**		**$23,480.99**		**$30,258.08**
1	Thermoplastic Pavement Marking - Letters and Symbols	24.8	SF	$5.25	$130.20	$10.00	$248.00	$11.25	$279.00
2	Thermoplastic Pavement Marking - Line 4"	3,685.0	FT	$0.75	$2,763.75	$0.75	$2,763.75	$2.82	$10,391.70
3	Seal Coat (Asphalt Emulsion)	10,110.0	SY	$2.15	$21,736.50	$1.79	$18,096.90	$1.35	$13,648.50
4	Mobilization	1.0	LS	$1,500.00	$1,500.00	$250.00	$250.00	$729.57	$729.57
5	Traffic Control and Protection, (Special)	1.0	LS	$1,000.00	$1,000.00	$250.00	$250.00	$751.40	$751.40
			Total Alternate 02 Bid:		**$27,130.45**		**$21,608.65**		**$25,800.17**
1	Thermoplastic Pavement Marking - Letters and Symbols	15.5	SF	$5.25	$81.38	$10.00	$155.00	$11.25	$174.38
2	Thermoplastic Pavement Marking - Line 4"	3,260.0	FT	$0.75	$2,445.00	$0.75	$2,445.00	$2.82	$9,193.20
3	Seal Coat (Asphalt Emulsion)	5,690.0	SY	$2.15	$12,233.50	$1.935	$11,010.15	$1.35	$7,681.50
4	Mobilization	1.0	LS	$1,500.00	$1,500.00	$250.00	$250.00	$511.47	$511.47
5	Traffic Control and Protection, (Special)	1.0	LS	$1,000.00	$1,000.00	$250.00	$250.00	$526.81	$526.81
			Total Alternate 03 Bid:		**$17,259.88**		**$14,110.15**		**$18,087.36**
			Total Bid:		**$94,806.60**		**$72,751.70**		**$94,978.05**

As-Read: *$94,976.04*

AGENDA ITEM SUMMARY

BUFFALO GROVE VILLAGE BOARD

Regular Meeting: March 17, 2025

AGENDA ITEM 8.f. O-2025-36
Ordinance Amending Title 10 of the Village Code to Prohibit Parking on Raupp Boulevard at the Temporary Fire Station

Contacts

Liaison: Trustee Stein
Staff: Kyle Johnson

Staff Recommendation

Staff recommends approval.

Recommended Motion

I move to approve the ordinance amending parking restrictions along Raupp Boulevard between Lake Cook Road and Church Street.

Summary

Background

Larger Fire Department vehicles exiting the Public Services Facility garage onto Raupp Boulevard cannot safely exit if there are vehicles parked on Raupp Boulevard. Fire is requesting NO PARKING restrictions along Raupp Boulevard to ensure they can effectively respond to calls with required equipment. There is currently ample parking available in the surrounding parking lots including at the Village Hall, Buffalo Grove Golf Course, the Public Service Center (51 Raupp Blvd) and the Police parking lot.

Analysis

Existing parking restrictions in this location as listed in the Code are vague and unenforceable. The minor revision corrects an existing issue and provides the needed room for Fire Department vehicles. Public Works will sign the area appropriately.

Strategic Alignment

Guiding Principle

Principle 2: Outstanding Village Services

Goal

smart. with heart.
50 Raupp Blvd, Buffalo Grove, IL 60089 847-459-2500 vbg.org

Goal 1: Maintained effective village government: fiscally responsible and providing outstanding, responsive services

File Attachments

1. DRAFT Ordinance - Parking Restrictions Raupp

smart. with heart.
50 Raupp Blvd, Buffalo Grove, IL 60089 847-459-2500 vbg.org

ORDINANCE 2025-xxx

AN ORDINANCE APPROVING PARKING RESTRICTION CHANGES TO RAUPP BOULEVARD BETWEEN LAKE COOK ROAD AND CHURCH STREET

WHEREAS the Village of Buffalo Grove is a home rule unit pursuant to the Illinois Constitution of 1970; and

WHEREAS the Community Service Center at 51 Raupp Boulevard is now being utilized as a temporary fire station; and

WHEREAS use of said facility requires larger vehicles moving quickly under emergency circumstances; and

WHEREAS the parking of vehicles along Raupp Boulevard can endanger emergency response and private property; and

WHEREAS the recommendations of the Village Engineer have been presented to the Corporate Authorities.

NOW THEREFORE BE IT ORDAINED by the President and Board of Trustees of the Village of Buffalo Grove, Cook and Lake Counties, Illinois, as follows:

SECTION 1. The foregoing recitals are hereby adopted and incorporated and made a part of this Ordinance as if fully set forth herein.

SECTION 2. Line 79 of Section 1308 of Article XIII of Chapter BG-11 of Title 10 of the Village of Buffalo Grove Municipal Code is hereby amended by adding thereto the following portions as shown by the underlined and highlighted text and removing the following portions as shown by the ~~struck through~~ text below as follows:

> 79. ~~On the east curbline of Raupp Boulevard starting at the north driveway and ending at a point ninety-five feet north.~~ Along the east and west curblines of Raupp Boulevard between Lake Cook Road and Church Street.

SECTION 3. If any section, paragraph, clause or provision of this Ordinance shall be held invalid, the invalidity thereof shall not affect any other provision of this Ordinance.

SECTION 4. This Ordinance shall be in full force and effect from and after its passage and approval and shall be codified.

AYES: _____

smart. with heart.
50 Raupp Blvd, Buffalo Grove, IL 60089 847-459-2500 vbg.org

NAYES: _____
ABSENT: _____
PASSED: _____, 2025
APPROVED: _____, 2025
PUBLISHED: _____, 2025

ATTEST:

_____
Janet M. Sirabian, Village Clerk

APPROVED:

_____
Eric N. Smith, Village President

DRAFT

AGENDA ITEM SUMMARY

BUFFALO GROVE VILLAGE BOARD

Regular Meeting: March 17, 2025

AGENDA ITEM 8.g. O-2025-37
Ordinance Authorizing a Contract with HighStar Traffic for the 2025 Paving Marking Project

Contacts

Liaison: Trustee Stein
Staff: Kyle Johnson

Staff Recommendation

Staff recommends approval.

Recommended Motion

I move to approve an Ordinance authorizing the purchase of Pavement Marking Material & Labor through the Suburban Purchasing Cooperative for the 2025 Pavement Marking Maintenance Project.

Summary

Recommendation

Staff recommends that the Village Board authorize the Village Manager to purchase Thermoplastic & Urethane Lane (pavement) Marking Material & Labor from HighStar Traffic, formerly Superior Striping, through the Northwest Municipal Conference Suburban Purchasing Cooperative (SPC) contract #229, in a not to exceed amount of $49,523.29 in accordance with the Illinois Governmental Joint Purchasing Act (30 ILCS 525/0.01 et seq.), pending review and approval of the contract by the Village Attorney. Due to the size and scope of the project, staff recommends a contingency fund be created and controlled by the Village in the amount of $4,502.12 (10.0% of the project cost). Public Works staff will consult with the Village Manager prior to exceeding the original scope of work cost of $45,021.17. This project is funded by General Funds.

Background

The last pavement marking maintenance program was completed in 2023 and to maintain highly visible pavement marking it is recommended to regularly evaluate and maintain existing pavement markings. Staff have reviewed all pavement markings west of Buffalo Grove Road and within the industrial park area, identifying those in need of repair. These deteriorated markings will be included in the 2025 Pavement Marking Maintenance Project.

smart. with heart.
50 Raupp Blvd, Buffalo Grove, IL 60089 847-459-2500 vbg.org

Strategic Alignment

Guiding Principle

Principle 3: Plan and Invest in the Future

Goal

Goal 1: Maintained effective village government: fiscally responsible and providing outstanding, responsive services

File Attachments

1. DRAFT Ordinance -2025 Pavement Marking Maintenance

smart. with heart.
50 Raupp Blvd, Buffalo Grove, IL 60089 847-459-2500 vbg.org

ORDINANCE 2025-xxx

AN ORDINANCE AUTHORIZING THE PURCHASE OF PAVEMENT MARKING MATERIAL & LABOR THROUGH THE SUBURBAN PURCHASING COOPERATIVE FOR THE 2025 PAVING MARKING MAINTENANCE PROJECT

WHEREAS the Village of Buffalo Grove is a home rule unit pursuant to the Illinois Constitution of 1970; and

WHEREAS, the Village is a member of the Northwest Municipal Conference and the Suburban Purchasing Cooperative and

WHEREAS the Village may make purchases in accordance with Illinois Governmental Joint Purchasing Act (30 ILCS 525/0.01 et seq.)

NOW THEREFORE BE IT ORDAINED by the President and Board of Trustees of the Village of Buffalo Grove, Cook and Lake Counties, Illinois, as follows:

SECTION 1. The foregoing recitals are hereby adopted and incorporated and made a part of this Ordinance as if fully set forth herein.

SECTION 2. The Village Manager is authorized to purchase Thermoplastic & Urethane Lane (pavement) Marking Material & Labor at a price not to exceed $49,523.29 from HighStar Traffic of Bartlett, IL.

SECTION 3. If any section, paragraph, clause or provision of this Ordinance shall be held invalid, the invalidity thereof shall not affect any other provision of this Ordinance.

SECTION 4. This Ordinance shall be in full force and effect from and after its passage and approval and shall not be codified.

AYES: _____
NAYES: _____
ABSENT: _____
PASSED: _____, 2025
APPROVED: _____, 2025
PUBLISHED: _____, 2025

ATTEST:

_____
Janet M. Sirabian, Village Clerk

APPROVED:

_____
Eric N. Smith, Village President

DRAFT

smart. with heart.
50 Raupp Blvd, Buffalo Grove, IL 60089 847-459-2500 vbg.org

AGENDA ITEM SUMMARY

BUFFALO GROVE VILLAGE BOARD

Regular Meeting: March 17, 2025

AGENDA ITEM 8.h. O-2025-38
Ordinance Authorizing the Disposal of Surplus Property

Contacts

Liaison: Trustee Bocek
Staff: Chris Black

Staff Recommendation

Staff recommends approval.

Recommended Motion

I move to approve an Ordinance authorizing the disposal of surplus property.

Summary

Ordinance Authorizing the Disposal of Surplus Property

Strategic Alignment

Guiding Principle

Principle 1: Financially Responsible and Sound

Goal

Goal 1: Maintained effective village government: fiscally responsible and providing outstanding, responsive services

File Attachments

1. BOT 3.17.25_Ord Authorizing the Disposal of Surplus Property
2. BOT 03.17.25_Surplus List

smart. with heart.
50 Raupp Blvd, Buffalo Grove, IL 60089 847-459-2500 vbg.org

ORDINANCE 2025-xxx

AN ORDINANCE AUTHORIZING THE DISPOSAL OF SURPLUS VILLAGE PERSONAL PROPERTY

WHEREAS the Village of Buffalo Grove is a home rule unit pursuant to the Illinois Constitution of 1970; and

WHEREAS the President and Board of Trustees of the Village of Buffalo Grove find that the listed items of personal property now owned by the Village of Buffalo Grove are no longer necessary or useful to the Village of Buffalo Grove and the best interests of the Village will be served by disposal.

NOW THEREFORE BE IT ORDAINED by the President and Board of Trustees of the Village of Buffalo Grove, Cook and Lake Counties, Illinois, as follows:

SECTION 1. Pursuant to our Home Rule powers, the President and Board of Trustees of the Village of Buffalo Grove find that the listed items of personal property now owned by the Village of Buffalo Grove are no longer necessary or useful to the Village of Buffalo Grove and the best interests of the Village will be served by disposal.

SECTION 2. This Ordinance shall be in full force and effect from and after its passage and approval. This ordinance shall not be codified.

SECTION 3. If any item or portion of this Ordinance is for any reason held invalid, such decision shall not affect the validity of the remaining portion of such item or the remaining portion of this Ordinance

SECTION 4. This Ordinance shall be in full force and effect from and after its passage and approval and shall not be codified.

AYES: _____
NAYES: _____
ABSENT: _____
PASSED: _____, 2025
APPROVED: _____, 2025
PUBLISHED: _____, 2025

ATTEST:

_____
Janet M. Sirabian, Village Clerk

APPROVED:

_____
Eric N. Smith, Village President

smart. with heart.
50 Raupp Blvd, Buffalo Grove, IL 60089 847-459-2500 vbg.org

Village of Buffalo Grove 2025 Fixed Asset Disposals

Asset	Number	Serial Number	Date Acquired	Depreciation Year	Cost Basis
Streets/Forestry					
2008 Ford F-350	**402**	1FTWF31R58ED42825	4/7/2008	2009	$ 33,093.25
Police					
2013 Ford Interceptor	**702**	1FAHP2M81DG206652	3/1/2013	2014	$ 24,669.00
2013 Ford Interceptor	**701**	1FAHP2M83DG206653	3/1/2013	2014	$ 24,374.00

-

AGENDA ITEM SUMMARY

BUFFALO GROVE VILLAGE BOARD

Regular Meeting: March 17, 2025

AGENDA ITEM 8.i. O-2025-39
Ordinance Approving a Special Use for a Child Home Daycare at 456 Chicory.

Contacts

Liaison: Trustee Weidenfeld
Staff: Nicole Woods

Staff Recommendation

Staff recommends approval.

Recommended Motion

I move to approve an ordinance approving a Special Use for a Child Home Daycare at 456 Chicory.

Summary

See attached memorandum.

Strategic Alignment

Guiding Principle

Principle 3: Plan and Invest in the Future

Goal

File Attachments

1. Memo - Home Daycare - 456 Chicory Ln
2. DRAFT Ordinance Home Daycare -456 Chicory Lane
3. DRAFT Ordinance - Exhibit C. Plan Set
4. DRAFT Ordinance - Exhibit D. Draft PZC Minutes - March 5, 2025

smart. with heart.
50 Raupp Blvd, Buffalo Grove, IL 60089 847-459-2500 vbg.org

MEMORANDUM

DATE: March 17, 2025

TO: Village Manager, Dane Bragg

FROM: Nicole Woods, Community Development Director
Andrew Binder, Associate Planner

SUBJECT: 456 Chicory Ln – Special Use for a Child Daycare Home

RECOMMENDATION

Staff recommends that the Village Board approve an Ordinance granting a Special Use to allow a Child Home Daycare at 456 Chicory Lane subject to the conditions in the attached Ordinance.

Figure 1: Subject Property

PROJECT BACKGROUND

Katerina Shafran currently operates a home daycare and is seeking a Special Use for her operations at 456 Chicory Lane.

The child daycare home, K-Educate, operates from 6:00 a.m. to 6:00 p.m., Monday through Friday and provides care for children from 3 months to 12 years of age. The petitioner has also hired two assistants to help with the home daycare business.

The petitioner has an approved IL DCFS license. The Village Code allows homes to have up to 8 children at once and no more than 12 within a 24-hour period. The petitioner has agreed to adhere to this requirement. The property has passed the required Building, Fire, and Health inspections for a home daycare.

PUBLIC HEARING COMMENTS

Staff received a few general inquiries about the request in advance of the public hearing. One neighbor was not in favor of the home daycare and indicated that parents sometimes park in the street during pick up and drop off. No members of the public were present at the public hearing to speak for or against the request.

PLANNING & ZONING COMMISSION (PZC) RECOMMENDATION

The PZC **unanimously recommended approval** of the Special Use Ordinance for a Child Daycare Home for up to 8 children at any one time, (including natural born or adopted children), and no more than 12 children in a 24-hour day, subject to the following conditions:

1. Petitioner shall comply with the standards set forth in Section 17.12.141, Section 17.28.040 and Section 17.28.060 of the Village Zoning Ordinance.
2. The special use shall continue in effect until the conclusion of the current calendar year, followed by an additional period of two (2) years subsequent to the end of the year in which this Ordinance is re-authorized. The Petitioner is required to submit an application to the Village for the re-authorization of the special use in accordance with Section 17.28.060.C of the Village Zoning Ordinance every two (2) years at the conclusion of this calendar year, in order to be re-authorized alongside the other Village Home Day Cares.
3. The petitioner shall maintain their DCFS license. A copy of the DCFS license shall be provided to the Village annually prior to the issuance of a business license.
4. The special use shall be automatically revoked if the Petitioner fails, for any reason, to have a valid license issued by the Illinois Department of Children and Family Services (IL DCFS).
5. The Petitioner shall obtain a Village business license to continue the operation of the child daycare home and shall renew the business license annually.
6. The special use does not authorize any use in violation of any covenants running with the Property.
7. No person who has been convicted of a felony or misdemeanor involving violence against a person shall be permitted to reside in the day care home at any time, on a temporary or permanent basis, or otherwise be allowed to be present in the day care home at any time when children are present. The petitioner must agree to permit the Village of Buffalo Grove to conduct, or cause to be conducted, a criminal background check of every person residing in the day care home.
8. Petitioner shall maintain the Property in full compliance with Village property maintenance standards at all times, as determined by the Village in its sole discretion.
9. This special use is granted to Katerina Shafran. Said special use does not run with the Property and is not granted to any business entity. Said special use is not transferable to another person or entity, and may not be used by any other person or entity.

ORDINANCE 2025-xxx

AN ORDINANCE APPROVING A SPECIAL USE FOR A CHILD HOME DAYCARE IN THE R-9 RESIDENTIAL ZONING DISTRICT

Katerina Shafran - 456 Chicory Lane

WHEREAS the Village of Buffalo Grove is a home rule unit pursuant to the Illinois Constitution of 1970; and

WHEREAS the real property ("Property") is zoned R–9, and is occupied by a single–family detached residence commonly known as 456 Chicory Lane, and is hereinafter legally described in Exhibit B; and,

WHEREAS, Katerina Shafran is the owner of the Property; and,

WHEREAS, Katerina Shafran ("Petitioner") who resides at the Property has petitioned the Village for a special use to operate a child home daycare at the Property; and,

WHEREAS, the Village Planning & Zoning Commission conducted a public hearing on March 5, 2025 concerning the petition for approval of the Special Use; and,

WHEREAS, the Planning & Zoning Commission made findings and determined that the petition meets the criteria for Special Uses and Special Uses for Home Daycares as set forth in the Buffalo Grove Zoning Ordinance, as described in the minutes attached as Exhibit D; and,

WHEREAS, the Planning & Zoning Commission voted 9 to 0 to unanimously recommend approval of the requested Special Use; and,

WHEREAS, the President and Village Board of Trustees after due and careful consideration have concluded that the proposed Special Use is reasonable and will serve the best interest of the Village.

WHEREAS, the proposed use shall be operated in accordance with and pursuant to the following exhibits:

EXHIBIT A	Petitioner Acceptance and Agreement concerning the Special Use for the Child Day Care Home at 456 Chicory Lane
EXHIBIT B	Legal Description of the Property
EXHIBIT C	Plan Set
EXHIBIT D	Draft Minutes March 5, 2025, Planning & Zoning Commission Meeting

smart. with heart.
50 Raupp Blvd, Buffalo Grove, IL 60089 847-459-2500 vbg.org

NOW THEREFORE BE IT ORDAINED by the President and Board of Trustees of the Village of Buffalo Grove, Cook and Lake Counties, Illinois, as follows:

SECTION 1. This Ordinance is made pursuant to and in accordance with the Village's Zoning Ordinance and the Village's Home Rule powers. The preceding whereas clauses are hereby made a part of this Ordinance.

SECTION 2. The Corporate Authorities hereby adopt a proper, valid, and binding ordinance approving the Special Use for the Property at 456 Chicory Lane, Buffalo Grove, IL, subject to the following conditions:

1. Petitioner shall comply with the standards set forth in Section 17.12.141, Section 17.28.040 and Section 17.28.060 of the Village Zoning Ordinance.

2. The special use shall continue in effect until the conclusion of the current calendar year, followed by an additional period of two (2) years subsequent to the end of the year in which this Ordinance is re-authorized. The Petitioner is required to submit an application to the Village for the re-authorization of the special use in accordance with Section 17.28.060.C of the Village Zoning Ordinance every two (2) years at the conclusion of this calendar year, in order to be re-authorized alongside the other Village Home Day Cares.

3. The petitioner shall maintain their DCFS license. A copy of the DCFS license shall be provided to the Village annually prior to the issuance of a business license.

4. The special use shall be automatically revoked if the Petitioner fails, for any reason, to have a valid license issued by the Illinois Department of Children and Family Services (IL DCFS).

5. The Petitioner shall obtain a Village business license to continue the operation of the child daycare home and shall renew the business license annually.

6. The special use does not authorize any use in violation of any covenants running with the Property.

7. No person who has been convicted of a felony or misdemeanor involving violence against a person shall be permitted to reside in the day care home at any time, on a temporary or permanent basis, or otherwise be allowed to be present in the day care home at any time when children are present. The petitioner must agree to permit the Village of Buffalo Grove to conduct, or cause to be conducted, a criminal background check of every person residing in the day care home.

8. Petitioner shall maintain the Property in full compliance with Village property maintenance standards at all times, as determined by the Village in its sole discretion.

9. This special use is granted to Katerina Shafran. Said special use does not run with the Property and is not granted to any business entity. Said special use is not transferable to another person or entity, and may not be used by any other person or entity.

SECTION 3. If any section, paragraph, clause or provision of this Ordinance shall be held invalid, the invalidity thereof shall not affect any other provision of this Ordinance.

SECTION 4. This Ordinance shall be in full force and effect on and after its passage and approval, subject to the Petitioner's execution of the Acceptance and Agreement attached hereto as Exhibit A, incorporated herein and made a part hereof, and the filing of said executed Acceptance and Agreement form with the Village. This Ordinance shall not be codified.

AYES: _____
NAYES: _____
ABSENT: _____
PASSED: _____, 2025
APPROVED: _____, 2025
PUBLISHED: _____, 2025

ATTEST:

_____
Janet M. Sirabian, Village Clerk

APPROVED:

_____
Eric N. Smith, Village President

DRAFT

smart. with heart.
50 Raupp Blvd, Buffalo Grove, IL 60089 847-459-2500 vbg.org

EXHIBIT A

Petitioner Acceptance and Agreement
concerning the Special Use for the Child Home Daycare Home at 456 Chicory Lane
Katerina Shafran
456 Chicory Lane

Katerina Shafran does hereby accept and agree to abide by and be bound by each of the terms, conditions, and limitations set forth in this Ordinance, duly passed and approved by the Village of Buffalo Grove, Illinois, authorizing the special use for the child home daycare at 456 Chicory Lane.

The undersigned acknowledges that she has read and understands all of the terms and provisions of said this Ordinance, and does hereby acknowledge and consent to each and all of the provisions, restrictions, and conditions of said Ordinance.

_____

Katerina Shafran
456 Chicory Lane
Buffalo Grove, IL 60089

DRAFT

EXHIBIT B

Legal Description

Katerina Shafran
456 Chicory Lane

LOT 42 IN BLOCK 3 IN RIDGEWOOD, BEING A SUBDIVISION OF PART OF THE SOUTHEAST 1 / 4 OF SECTION 33 AND A PART OF THE SOUTHWEST 1 / 4 OF SECTION 34, BOTH IN TOWNSHIP 43 NORTH, RANGE 11, EAST OF THE THIRD PRINCIPAL MERIDIAN, ACCORDING TO THE PLAT THEREOF RECORDED MARCH 15, 1977 AS DOCUMENT 1824725 IN BOOK 60 OF PLATS, PAGE 1 AND CORRECTED BY A CERTIFICATE OF CORRECTION RECORDED ON NOVEMBER 16, 1977 AS DOCUMENT 1880467 AND FURTHER CORRECTED BY CERTIFICATE OF CORRECTION RECORDED APRIL 26, 1978 AS DOCUMENT 1913014, IN LAKE COUNTY, ILLINOIS

Street Address: 456 Chicory Lane, Buffalo Grove, Illinois

PIN: 15-33-402-092

DRAFT

EXHIBIT C

<u>Plan Set</u>
Katerina Shafran
456 Chicory Lane

DRAFT

smart. with heart.
50 Raupp Blvd, Buffalo Grove, IL 60089 847-459-2500 vbg.org

EXHIBIT D

<u>Draft Minutes from the March 5, 2025, Planning & Zoning Commission Meeting</u>
Katerina Shafran
456 Chicory Lane

DRAFT

Katerina Shafran
456 Chicory Ln
Buffalo Grove, IL,60089
224-433-4830
keducate123@gmail.com

29th of January 2025

Village of Buffalo Grove

To Whom It May Concern,

I have a group home daycare that has 12 students and two assistants that make up my business. I am open from 6am to 6pm Monday through Friday however, my students are dropped off somewhere between 8am and 9am and picked up from 5pm to 6pm. When the parents come to pick up their child, they have 4 spots in my driveway to park. I also have 2 garage spots that my assistants and myself use. I have provided the parents a detailed letter to show them how to appropriately pick up and drop off their student. They know that they have less than 5 minutes to be in my driveway so as to not bother my neighbors.

We have a big backyard that is fenced in with a gate. The fence is 4 feet high to ensure the safety of the children. We also have a playground within the fence that has a sandbox, playhouse, and gross motor area. The assistants help the students facilitate and access the outdoor area and playground. The area behind the outdoor space is completely empty of houses and is an open field. There are many trees and shrubs that help reduce noise and keep the students safe within the outdoor fenced area. The students play outside from 11am-12pm.

DCFS provided me with a group home daycare license for 12 students and 1 assistant. I wanted to ensure the safety of my students so I hired another assistant to create the best environment. I have already provided the hazard protection plan, the fire evacuation plan, the schedule of daily activities, and the inventory list because safety and a fulfilling curriculum is essential in my daycare.

My curriculum is based on the Illinois Early Learning Standards. I use these standards throughout my lessons to maximize the learning that can take place throughout the school day. I also use a Russian curriculum that is based on my knowledge and multiple degrees in preschool education.

Sincerely,

Katerina Shafran

Dear Parents,
This is a letter about a couple new rules in our daycare.

1. Parking in a cul-de-sac is illegal if there are yellow/red curbs, or if you are preventing emergency vehicles from being able to completely turn around without having to do a two point turn. If it is a larger cul-de-sac you should be able to park, but you must park parallel to the curb and you must be 1.5 meters away from driveways.
1. There is no parking within 15 feet of a fire hydrant to ensure easy access for emergency vehicles. It's against the law to park in front of fire hydrants or driveways, which can obstruct emergency response vehicles. The vehicle may be impounded and fined up to $150 or more for violations.
1. There is no parking within 20 feet of an intersection or crosswalk, ensuring clear visibility for drivers and pedestrians.
1. Most importantly, there is NO parking in front of driveways because it obstructs the entrances to residential or commercial places.

Dear Parents,
When you drop off and pick up your children from our daycare, these are a few things we want you to understand:

- Parking spaces are limited and you make it difficult for other parents to park their cars.
- The behavior of children changes dramatically and it is difficult for teachers to control it in your presence.
- The number of people increases in the daycare or the daycare playground, so the attention of teachers is scattered. This can lead to serious consequences.
- Because of these reasons, please try to reduce the time when dropping off and picking up children to 5 minutes.
- If you want to spend time together with other children and their families from our daycare, please do not do it on the grounds of the daycare. For this purpose, there are parks, squares, and playgrounds for public use.

We want to have these rules in place so that we are quiet and respectful of our neighbors and our neighborhood.
In the summer, for protection from the sun, please be sure to bring hats and be sure to apply sunscreen to your child at home in the morning before you bring kids to daycare.
Our outdoor playground is equipped with wood chips for the safety and comfort of your children. Please wear closed toe shoes.

Parents name _____ _____

Parent signature _____Date_____

During your testimony at the Public Hearing, you need to testify and present your case for the Child Home Daycare Special Use being requested. In doing so, you need to address the six (6) Special Use Standards listed below:

CHILD DAY CARE HOME SPECIAL USE STANDARDS

A. Provision of child care shall be limited each day to the hours of 6:00 a.m. to 8:00 p.m. Outdoor play shall not be allowed before 8:00 a.m.

Response: In response to this provision, we will ensure that child care services are provided within the designated hours of 8:00 a.m. to 6:00 p.m. Monday through Friday. Additionally, we will adhere to the restriction on outdoor play before 8:00 a.m. to respect the peace and quiet of the surrounding neighborhood during early morning hours. This commitment reflects our dedication to operating in compliance with local regulations and fostering a harmonious relationship with the neighbors and the community.

B. Adequate space shall be provided on the driveway of the property for parking while children are being dropped off or picked up at the home.

Response: We will ensure that adequate space is available on the driveway of the property to accommodate parking while children are being dropped off or picked up at the home. This will help facilitate a smooth and safe process for families accessing our child care services, while also minimizing disruptions to traffic flow in the neighborhood. We are committed to providing a convenient and welcoming environment for all families who utilize our services.

C. Traffic congestion or safety hazards shall not be created in the adjacent neighborhood.

Response: In response to this requirement, we are committed to ensuring that our operations do not contribute to traffic congestion or create safety hazards in the adjacent neighborhood. We have implemented measures such as designated drop-off and pick-up areas, traffic flow management, and communication with parents to minimize any potential impacts on the surrounding area. Our priority is to maintain the safety and well-being of both our children and the community at large.

D. A play area shall be provided in the rear yard of the property. Said area shall be enclosed by a fence at least four feet in height to ensure the safety of the children. The fenced play area shall be secured with self-closing and self-latching gate(s) as approved by the Village. Said play area shall be screened from adjacent properties with fencing or landscaping.

Response: To this requirement, we have ensured that a designated play area is provided in the rear yard of the property. This play area is enclosed by a fence at least four feet in height to ensure the safety of the children. Additionally, the fenced play area is equipped with self-closing and self latching gate(s) as approved by the Village to further enhance safety measures.

Furthermore, we will ensure that the play area is appropriately screened from adjacent properties either through fencing or landscaping to provide privacy and minimize disturbances to neighboring properties. Our commitment is to create a safe and enjoyable outdoor space for the children under our care while also being considerate of the surrounding community and adhering to regulatory standards set forth by the Village.

E. The day care activities shall not create undue noise or other nuisances for adjacent properties. There shall be no outdoor sound amplification devices which produce distinctly and loudly audible sounds beyond the boundary of the property from which the sound originates.

Response: We are committed to ensuring that our daycare activities do not create undue noise or other nuisances for adjacent properties. We will refrain from using outdoor sound amplification devices that produce loud and distinctly audible sounds beyond the boundary of our property. We understand the importance of maintaining a peaceful environment for both the children under our care and the neighboring properties. We will take appropriate measures to manage noise levels and conduct our activities in a manner that respects the tranquility of the surrounding area. Our goal is to be a considerate and responsible member of the community, and we will adhere to these guidelines to promote harmony and goodwill with our neighbors.

F. Employees who are not residents of the day care home may be employed by the day care provider, if it is determined by the Planning and Zoning Commission that this would not be detrimental to the neighborhood. Parking shall be provided on the property for any employee driving to the home.

Response: In response to this provision, we will ensure that any employees who are not residents of the daycare home and are employed by the daycare provider are provided a garage spot to park their car. Additionally, any other person coming to the group home daycare parks in the driveway.

G. An approved day care home shall be subject to periodic inspection by the Village in accordance with Village procedures for inspections concerning health, life-safety and other applicable regulations.

Response: We acknowledge that our approved daycare home will be subject to periodic inspection by the Village in accordance with their procedures for inspections related to health, life-safety, and other applicable regulations. We are committed to maintaining a safe and healthy environment for the children under our care, as well as complying with all relevant regulations and standards set forth by the Village. We will cooperate fully with Village inspectors during these inspections to ensure that our daycare home meets all necessary requirements and remains in compliance with applicable regulations. Our priority is the well-being and safety of the children in our care, and we will take proactive measures to address any concerns identified during these inspections to ensure the continued quality of our daycare services.

H. The Planning and Zoning Commission and Corporate Authorities may impose conditions and restrictions as may be necessary or appropriate to comply with the foregoing criteria and standards. The foregoing standards may be modified as deemed reasonable in specific cases.

Response: In response to this provision, we acknowledge that the Planning and Zoning Commission and Corporate Authorities have the authority to impose conditions and restrictions deemed necessary or appropriate to comply with the criteria and standards outlined. Additionally, we understand that these standards may be modified as deemed reasonable in specific cases. We are committed to working closely with the Planning and Zoning Commission and Corporate Authorities to ensure that any conditions or restrictions imposed are met and that modifications to the standards are implemented in a reasonable manner. Our goal is to maintain compliance with all regulatory requirements while providing quality daycare services to the community. We appreciate the opportunity to collaborate with the authorities to ensure the safety, well-being, and satisfaction of the community.

I. The Planning and Zoning Commission shall consider the number and location of other child day care homes so as to avoid congestion and other negative impacts.

Response: We understand that the Planning and Zoning Commission will consider the number and location of other child day care homes to avoid congestion and other negative impacts.

During your testimony at the Public Hearing, you need to testify and present your case for the Special Use being requested. In doing so, you need to address the six (6) Special Use Standards listed below:

SPECIAL USE STANDARDS

1. The special use will serve the public convenience at the location of the subject property; or the establishment, maintenance or operation of the special use will not be detrimental to or endanger the public health, safety, morals, comfort, or general welfare;

   Response: The special use at our home will be beneficial and helpful to the neighborhood by assisting busy neighborhood parents and providing a safe and convenient daycare for their children. We have been raising our own kids at our property without posing any health or safety issues to the overall wellbeing of the neighbors. The group home daycare special use will have no negative impact.

2. The location and size of the special use, the nature and intensity of the operation involved in or conducted in connection with said special use, the size of the subject property in relation to such special use, and the location of the site with respect to streets giving access to it shall be such that it will be in harmony with the appropriate, orderly development of the district in which it is located;

   Response: This group home daycare use will fit well with our neighborhood which is family oriented. Considering the size of our home, driveway, and outdoor space which the kids will be utilizing, the daycare will not contribute to extra noise or traffic issues. Proper coordination has been put in place for drop off and pick up of the children.

3. The special use will not be injurious to the use and enjoyment of other property in the immediate vicinity of the subject property for the purposes already permitted in such zoning district, nor substantially diminish and impair other property valuations with the neighborhood;

   Response: The group home daycare use in our home will not cause any danger to the neighborhood. This will not in any shape or form hinder the neighbors from enjoying their own properties as the kids will be well supervised even when needing to play outside in the backyard.

4. The nature, location and size of the buildings or structures involved with the establishment of the special use will not impede, substantially hinder or discourage the development and use of adjacent land and buildings in accord with the zoning district within which they lie;

   Response: The group home daycare use will not disturb any development of the neighborhood buildings or structures. Our use will continue to abide with the zoning rules and regulations.

5. Adequate utilities, access roads, drainage, and/or other necessary facilities have been or will be provided;

   Response: Our use for the group home daycare does not require any special utilities or equipment besides the regular water, garbage, sewage, parking, etc., which we already have in place for our daily use.

6. Parking areas shall be of adequate size for the particular special use, which areas shall be properly located and suitably screened from adjoining residential uses, and the entrance and exit driveways to and from these parking areas shall be designed so as to prevent traffic hazards, eliminate nuisance and minimize traffic congestion in the public streets.

   Response: Parking in our driveway will be utilized by the parents who are dropping off their kids. Our driveway could fit up to 4 cars at a time. There is a plan that has been put in place to avoid blocking other neighbors who will be driving in and out of their properties in our court. The parents received a letter with this specific plan so they can adhere to it.

MINUTES OF THE REGULAR MEETING OF THE PLANNING AND ZONING COMMISSION HELD AT JEFFREY S. BRAIMAN COUNCIL CHAMBERS FIFTY RAUPP BLVD, BUFFALO GROVE, IL 60089, WEDNESDAY, MARCH 5, 2025

CALL TO ORDER

Chairperson Weinstein called the meeting to order at 7:30 PM.

Roll call indicated the following were present:PZC Chairperson Weinstein, PZC Vice Chairperson Richards, PZC Commissioner Au, PZC Commissioner Moodhe, PZC Commissioner Spunt, PZC Commissioner Davis, PZC Commissioner Saxena, PZC Commissioner Schwartz, PZC Commissioner Worlikar.

Also present were: Trustee Liaison Weidenfeld, Village Attorney Patrick Brankin, Deputy Community Development Director Purvis, Associate Planner Binder

PUBLIC HEARINGS/ITEMS FOR CONSIDERATION

A. **Consideration of a Variation to the Fence Code pertaining to fences in residential districts for the purpose of replacing an 8-foot solid fence at the property line along Route 83 / McHenry Road at 1125 Devonshire Road**

Associate Planner Binder provided an overview of the fence variation request and indicated that staff is recommending approval of the variation as the fence is an exact replacement of the existing fence in height, style and location.

The petitioner, Ronald Borok was sworn in.

Mr. Borok provided some background on how and why the original 8-foot fence variation was granted. He indicated that the road is at a higher level than his home's level and that the road was expanded after he purchased his home.

Com. Au asked about the neighbor's fence and whether it had recently been replaced.

Binder indicated he was not aware of the fence having been replaced.

Com. Moodhe asked if the Code hadn't already been amended to allow taller fences along busy roads.

Binder responded that the maximum height for fences along busy roads like this is 6 feet, but those fences can be solid.

Com. Worlikar asked about the original variations that were granted for homes in the neighborhood.

Binder responded that each lot received its own variation for each 8-foot fence.

The staff report was entered into the record as Exhibit 1.

DRAFT

Com. Richards made a motion to grant a variation to Section 15.20.040 of the Buffalo Grove Fence Code to allow the installation of an 8-foot solid wood fence that exceeds the maximum height of a fence that abuts a major roadway along Route 83/McHenry Road at 1125 Devonshire Road, provided the fence shall be installed in accordance with the documents and plans submitted as part of this petition.

Com. Davis seconded the motion.

The floor was opened for Commissioner discussion.

Com. Moodhe noted that the Commission is just allowing something that already exists. He noted that these sorts of requests should be allowed by our Code to make life easier for our residents.

Chairperson Weinstein indicated that he fully supports the request as every other fence in the neighborhood matches the 8-foot height.

Moved by Com. Richards, seconded by Com. Davis to approve the request. Upon roll call, Commissioners voted as follows:

AYES:	9	Mitchell Weinstein, Kevin Richards, Amy Au, Adam Moodhe, Neil Worlikar, Marc Spunt, Jason Davis, Sujat Saxena, Don Schwartz
NAYS:	0	None
ABSENT:	0	

Motion declared Passed.

B. **Consideration of a Request for a Special Use for a Home Daycare at 456 Chicory Lane**

Associate Planner Binder provided an overview of the special use for the home daycare request and indicated that staff is recommending approval.

The petitioner, Katrina Shafran was sworn in.

She indicated that there are 12 kids total at the daycare, but there are typically not more than 8 children in the home at one time. She also mentioned that she has two assistants at the daycare that help to supervise the children and make meals.

Shafran noted that most of the kids arrive at 8:00am and are picked up by 6:00pm. She talked through the drop-off procedure and instructions that have been shared with the parents.

She further noted that kids have supervised time outside with her or her assistants.

Com. Davis asked if there were any formal complaints made to staff regarding parking on the cul-de-sac.

Binder indicated that there were no known complaints, prior to the petitioner's application being submitted.

DRAFT

Shafran indicated that lots of parents from the nearby school park in their cul-de-sac and walk with students to the school. She noted that her parents follow the drop-off and pick-up protocol.

Com. Richards asked how long the business had been in the home.

Shafran indicated that they have had the business for more than five years.

Com. Richards asked if there had been issues with the kids or with neighbors.

Shafran stated there had not.

Com. Richards asked if staff had received any complaints about this property in the past.

Binder indicated that we have not.

Com. Moodhe asked for clarification on the number of children and the duration of the approval.

Shafran stated there will be up to 12 children in her care, but no more than 8 children in the home at once.

Binder indicated that the 6-month term was for the daycare to come into compliance with Code requirements of no more than 8 children in the home at once. He indicated that the approval would be for the standard two-year timeframe, provided the business is compliant with our codes.

Com. Saxena asked about the DCFS license and other Village requirements.

Binder indicated that other than the special use and the business license, the daycare is compliant. It has a DCFS license and has passed all Village inspections.

Chairperson Weinstein asked the petitioner if they just got their DCFS license.

Shafran indicated that she has had her DCFS license for years.

Chairperson Weinstein asked staff if there had been any complaints regarding traffic/parking on the street prior to this application being submitted.

Binder indicated that there had not been any complaints to his knowledge.

The staff report was entered into the record as Exhibit 1.

Com. Richards made a motion to recommend approval of the special use for a child daycare home for up to 12 children for 6 months from the approval date of the special use. Thereafter, the home daycare must adhere to the Village Code requirements and will only be permitted to provide care for up to 8 children at any one time, including natural-born or adopted children, and no more than 12 children

DRAFT

in a 24-hour day, subject to the conditions in the staff report.

Com. Davis seconded the motion.

Com. Spunt noted that his children attended a home daycare many years ago and this business is a great addition to the community.

Com. Davis noted that he lives near the home daycare and is supportive. He noted that there have been no issues that staff have been made aware of in the last 5 years.

Com. Moodhe noted that the last few home daycares have been on cul-de-sacs which he supports as there is reduced traffic.

Chairperson Weinstein noted that he is in support of the special use. He stated that there have been no issues with any of the home daycare uses that have been approved in the Village. He also indicated that these types of uses are well regulated.

Moved by Kevin Richards, seconded by Jason Davis to recommend approval. Upon roll call, Commissioners voted as follows:

AYES:	9	Mitchell Weinstein, Kevin Richards, Amy Au, Adam Moodhe, Neil Worlikar, Marc Spunt, Jason Davis, Sujat Saxena, Don Schwartz
NAYS:	0	None
ABSENT:	0	

Motion declared Passed.

C. **Consideration of a Variation to the Village Zoning Ordinance to construct a 3-season room that would encroach in the rear yard setback at 1400 Madison Drive**

Associate Planner Binder provided an overview of the zoning variation request and indicated that staff is recommending approval.

The petitioners, Marc and Barara Berman were sworn in.

Mrs. Berman indicated that they have lived in the Village for many years. She noted that they love the area so much that they have decided they want to continue to improve their home and remain in the Village.

She noted the location of the addition is right off of the living room. She noted that the shed on the property line was not authorized, and built by the previous owner, but they plan to remove it.

Mr. Berman echoed his wife's comments and noted that they are committed to the community. He indicated that the addition will be constructed with high quality architecture and will match the home. He also commented that the removal of the shed will actually increase the setback on the property.

Com. Moodhe asked about the tree in the backyard and whether it would be

DRAFT

removed.

Mrs. Berman indicated that they are hoping to keep the tree through the construction.

Com. Moodhe asked if the shed would be relocated or completely removed.

Mrs. Berman indicated that it would be removed.

Com. Moodhe noted that the placement of the homes is odd. He asked if the three-season room would be conditioned.

Mrs. Berman indicated that it will not, but may have a vented fireplace. There will not be electricity installed in the room.

Com. Worlikar asked about the existing patio and asked if the addition will only cover the patio area.

Mrs. Berman confirmed that is correct.

Com. Worlikar asked if any of the neighbors had an issue with the addition.

Mr. Berman indicated that he spoke with the neighbors prior to the public hearing sign being placed on the property and they are supportive.

The staff report was entered into the record as Exhibit 1.

Com. Richards made a motion to grant a variation to Section 17.40.020 of the Buffalo Grove Zoning Ordinance to allow the proposed three-season room addition to encroach into the required rear yard setback at 1400 Madison Drive, subject to the proposed addition being installed in accordance with the documents and plans submitted as part of the petition.

Com. Spunt seconded the motion and spoke on behalf of the request. He noted that he just did a three-season room addition on his home and can't wait for the weather to warm up to use it. He also noted with the proper permits, the room can have electricity if they wish to have it installed.

Chairperson Weinstein stated that a reasonable request like this one makes sense. He thanked the petitioners for speaking to their neighbors. He noted that the scope and size of the addition is in keeping with the character of the home and the neighborhood..

Moved by Com. Richards, seconded by Com. Spunt to approve. Upon roll call, Commissioners voted as follows:

AYES:	9	Mitchell Weinstein, Kevin Richards, Amy Au, Adam Moodhe, Neil Worlikar, Marc Spunt, Jason Davis, Sujat Saxena, Don Schwartz
NAYS:	0	None

DRAFT

ABSENT: 0
Motion declared Passed.

REGULAR MEETING

A. **Other Matters for Discussion**

B. **Approval of Minutes**

1. **January 15, 2025 - Draft Planning & Zoning Commission Meeting Minutes**
The Commissioners reviewed the draft minutes.

Moved by Adam Moodhe, seconded by Marc Spunt to approve the minutes from the January 15, 2025 Planning and Zoning Commission meeting. Upon roll call, Commissioners voted as follows:

AYES:	8	Mitchell Weinstein, Kevin Richards, Amy Au, Adam Moodhe, Neil Worlikar, Marc Spunt, Jason Davis, Don Schwartz
NAYS:	0	None
ABSENT:	0	

Motion declared Passed.

C. **Chairperson's Report**
Chairperson Weinstein indicated that members from the Wheeling Planning and Zoning Commission were in the audience this evening and welcomed them.

D. **Committee and Liaison Reports**
Com. Richards reviewed several projects that recently were discussed by the Village Board including the sign variation request for 1250 Radcliff, the new Fire Station, and Clove Park. He also noted that residents are moving into the Clove and that he had the opportunity to tour the building.

E. **Staff Report/Future Agenda Schedule**
Deputy Director Purvis noted that the March 19th meeting would be canceled, but that we are likely to have at least one meeting in April. She noted there are several projects in the queue, but we don't have a complete application to bring forward at this time.

Purvis provided an update on several Village projects that are opening in the coming weeks.

F. **Public Comments and Questions**
All comments will be limited to 5 minutes and should be limited to concerns or comments regarding issues that are relevant to Planning and Zoning Commission business and not on the regular agenda for discussion.

ADJOURNMENT

The meeting was adjourned at 8:25pm.

DRAFT

AGENDA ITEM SUMMARY

BUFFALO GROVE VILLAGE BOARD

Regular Meeting: March 17, 2025

AGENDA ITEM 8.j. O-2025-40
Ordinance accepting a bid and authorizing Fredrick Quinn Corporation to execute a contract with Break Through Enterprises for the Demolition of the existing Fire Station 25

Contacts

Liaison: Trustee Stein
Staff: Lawrence Kane

Staff Recommendation

Staff recommends approval.

Recommended Motion

I move to approve an Ordinance accepting a bid and authorizing Fredrick Quinn Corporation to execute a contract with Break Through Enterprises for the Demolition of the existing Fire Station 25 for an amount not to exceed $78,800.

Summary

Recommendation

Staff recommends approval of an Ordinance accepting a bid and authorizing Fredrick Quinn Corporation to execute a contract with Break Through Enterprises for the Demolition of the existing Fire Station 25 for an amount not to exceed $78,800.

Background

In February 2025, the Village entered into a contract with Fredrick Quinn Corporation (FQC) as the construction manager at risk for the Fire Station 25 rebuild. As part of the first step in the process, FQC sought proposals for the demolition of the existing structure.

On March 6, 2025, bids were received for one (1) trade package with a total of 7 individual bids received. After the receipt of bids, a scope review meeting was held with the apparent low bidders by FQC. Following their bid process, they recommend executing a contract with Break Through Enterprises for the demolition of the existing Fire Station 25 for an amount not to exceed $78,800. This amount is less than original budgeted amount of $80,000. Demolition is expected to begin in the next 30–60 days.

Strategic Alignment

smart. with heart.
50 Raupp Blvd, Buffalo Grove, IL 60089 847-459-2500 vbg.org

Guiding Principle
Principle 1: Financially Responsible and Sound
Principle 3: Plan and Invest in the Future
Principle 7: Builds Our Community

Goal
Goal 1: Maintained effective village government: fiscally responsible and providing outstanding, responsive services

File Attachments

1. DRAFT Ordinance - Fire Station 25 Demo
2. BP1 Award Recommendation Letter 03102025 (002)

smart. with heart.
50 Raupp Blvd, Buffalo Grove, IL 60089 847-459-2500 vbg.org

ORDINANCE 2025-xxx

AN ORDINANCE ACCEPTING A BID AND AUTHORIZING FREDRICK QUINN CORPORATION TO EXECUTE A CONTRACT WITH BREAK THROUGH ENTERPRISES FOR THE DEMOLITION OF FIRE STATION 25

WHEREAS the Village of Buffalo Grove is a home rule unit pursuant to the Illinois Constitution of 1970; and

WHEREAS the Village entered into a contract with Fredrick Quinn Corporation (FQC) as the construction manager at risk for the Fire Station 25 rebuild; and

WHEREAS on March 6, 2025, bids were received for one (1) trade package with a total of 7 individual bids received; and

WHEREAS after the receipt of bids, FQC is recommending the award of the trade contract to Break Through Enterprises for an amount not to exceed $78,800.00, as they were the lowest responsive and responsible bidder.

NOW THEREFORE BE IT ORDAINED by the President and Board of Trustees of the Village of Buffalo Grove, Cook and Lake Counties, Illinois, as follows:

SECTION 1. The foregoing recitals are hereby adopted and incorporated and made a part of this Ordinance as if fully set forth herein.

SECTION 2. The Village is authorizing FQC to enter into a contract with Break Through Enterprises for the demolition of Fire Station 25 (505 W. Dundee Rd) at a price not to exceed $78,800.00, pending final review and approval by the Village Attorney.

SECTION 3. If any section, paragraph, clause or provision of this Ordinance shall be held invalid, the invalidity thereof shall not affect any other provision of this Ordinance.

SECTION 4. This Ordinance shall be in full force and effect from and after its passage and approval and shall not be codified.

AYES: _____
NAYES: _____
ABSENT: _____
PASSED: _____, 2025
APPROVED: _____, 2025
PUBLISHED: _____, 2025

ATTEST: APPROVED:

_____ _____
Janet M. Sirabian, Village Clerk Eric N. Smith, Village President

DRAFT

smart. with heart.
50 Raupp Blvd, Buffalo Grove, IL 60089 847-459-2500 vbg.org

FQC™
CONSTRUCTION MANAGEMENT

March 10, 2025

Mr. Lawrence Kane
Fire Chief
Buffalo Grove Fire Department
1051 Highland Grove Dr.
Buffalo Grove, IL 60089

RE: Village of Buffalo Grove
New Fire Station No. 25
Award Recommendation
FQC #566

Dear Chief Kane:

On March 6, 2025 bids were received for one (1) trade package with a total of 7 individual bids received. The public bid opening for BP# 1 followed legal advertisement for bids on February 19, 2025, a mandatory pre-bid meeting on February 25, 2025, and issuance of electronic invitations to bid from Frederick Quinn Corporation to over 30 trade contractors.

The purpose of this letter is to provide a summary of the bids received and to recommend award of the trade contract to the low responsive, responsible contractor. The bid tally for this package is attached.

After the receipt of bids, a scope review meeting was held with the apparent low bidders by FQC. Following the review with the bidder FQC is recommending award of the trade contract to the low responsive and responsible bidder in the bid package noted below. The summary and award recommendation is as follows:

1. **Bid Package #1-02 Selective Demolition -** Seven (7) Bids were received. Break Thru Enterprises, Inc. of Lombard, IL submitted the low responsive and responsible base bid. There are no irregularities with the bid presented. **We recommend that BP #1-02 be awarded to Break Thru Enterprises, Inc. for a total award amount of Seventy-Eight Thousand Eight Hundred Dollars ($78,800.00).**

The recommended award value of $78,800.00 falls within the budgeted amount associated with this bid package.

If the above meets with your approval, please sign and return one copy of this correspondence indicating your acceptance of the recommendation. Upon receipt of your approval, Frederick Quinn Corporation will prepare and enter into contracts with the approved contractors.

Sincerely,

FREDERICK QUINN CORPORATION

Mark Winger
Manager of Preconstruction Services

cc: Chris Stilling / VBG; James Warnstedt /VBG; Jack Hayes / FQC; John Eallonardo / FQC
File / FQC

ACCEPTANCE: _____ *Date:* _____

FQC™
CONSTRUCTION MANAGEMENT

Frederick Quinn Corporation

Bid Tally

Trade: **BP #1-02 Building Demolition**
Project: **New Buffalo Grove - Fire Station No. 25**
FQC #584
Date: March 6, 2025

Subcontractor	Bid Bond	Certs	Qual. Form	Base Bid	Addenda		Alternates	Unit Prices
					Addenda 1	Addenda 2		
USD LLC - CHICAGO IL	X	X	X	$278,500.00	X	X	NA	NA
OMEGA III LLC - ELGIN IL	X	X	X	$83,750.00	X	X	NA	NA
ALPINE DEMO SERVICES LLC - ST CHARLES IL	X	X	X	$100,500.00	X	X	NA	NA
MCDONAGH DEMOLITION INC - CHICAGO IL	X	X	X	$152,150.00	X	X	NA	NA
BREAK THRU ENTERPRISES INC - LOMBARD IL	**X**	**X**	**X**	**$78,800.00**	**X**	**X**	**NA**	**NA**
REZZAR DEMOLITION LLC - ALGONQUIN IL	X	X	X	$79,631.61	X	X	NA	NA
ENVIRONMENTAL CLEANSING CORP - MARKHAM IL	X	X	X	$108,300.00	X	X	NA	NA

AGENDA ITEM SUMMARY

BUFFALO GROVE VILLAGE BOARD

Regular Meeting: March 17, 2025

AGENDA ITEM 8.k. O-2025-41
Ordinance Amending Chapter 15.14 of the Village Code As It Relates to Adopting the 2021 Illinois Energy Conservation Code

Contacts

Liaison: Trustee Weidenfeld
Staff: Nicole Woods

Staff Recommendation

Staff recommends approval.

Recommended Motion

I move to approve an ordinance approving an amendment to Chapter 15.14 of the Village Code as it Relates to Adopting the 2021 Illinois Energy Conservation Code

Summary

Background

In alignment with the State's Capital Development Board, the Village is looking to update to the 2021 Illinois Energy Code. The main differences between the existing 2018 Energy Code and the 2021 Illinois Energy Code are described below. The new energy code will apply to all new structures and to only the portion of an existing structure that is undergoing remodeling; there will not be retroactive requirements for existing structures.

Updates to referenced standards: There are new energy efficiency requirements for all types of construction (commercial, residential, new construction, remodels, additions, etc.).

Compliance and enforcement: The 2021 amendments include more explicit provisions on how compliance should be demonstrated. There is also more emphasis on demand responsive controls (an automatic response when a certain threshold is reached) for HVAC and water heating systems.

Energy efficiency credits: The new Code will allow additional flexibility and choices for reaching compliance through credits/offsets. A certain standard in energy efficiency needs to be met, but the credits would give the owner/developer choices on how to achieve the standard. For example, they may invest more in energy efficient windows, and less in building insulation as long as they meet the overall energy efficiency requirements for the building.

smart. with heart.
50 Raupp Blvd, Buffalo Grove, IL 60089 847-459-2500 vbg.org

Building envelope requirements: The new Code is stricter in terms of limiting the amount of energy loss through doors, windows, and the building envelope. This aims to keep cool air inside during the summer and warm air inside during the winter.

Lighting requirements: There is an increase in the standards for lighting systems in warehouses to make them more energy efficient. For example, when daylight meets a certain threshold within a space, the lights would automatically shut off.

Residential Code updates: There are two updates specific to residential construction. The mechanical ventilation standards are more stringent requiring a greater frequency at which fresh air is being pulled into the home. Insulation requirements for walls, ceilings and basements have also been increased.

Strategic Alignment

Guiding Principle

Principle 3: Plan and Invest in the Future

Goal

Goal 2: Enhanced, beautiful, safe and sustainable neighborhoods
Goal 4: Vibrant and innovative community: leading edge

File Attachments

1. Draft Ordinance - Amending Chapter 15.14

smart. with heart.
50 Raupp Blvd, Buffalo Grove, IL 60089 847-459-2500 vbg.org

ORDINANCE 2025-xxx

AN ORDINANCE AMENDING CHAPTER 15.14 ILLINOIS ENERGY CONSERVATION CODE

WHEREAS the Village of Buffalo Grove is a home rule unit pursuant to the Illinois Constitution of 1970.

NOW THEREFORE BE IT ORDAINED by the President and Board of Trustees of the Village of Buffalo Grove, Cook and Lake Counties, Illinois, as follows:

SECTION 1. Chapter 15.14 of the Village of Buffalo Grove Municipal Code is hereby amended to read as follows:

15.14.010 - Adoption by reference.

The ~~2018~~ 2021 Edition of the International Energy Conservation Code with Illinois Amendments is adopted by reference.

15.14.020 - Amendments.

The ~~2018~~ 2021 Edition of the International Energy Conservation Code with Illinois Amendments is amended to read as follows:

Section 102.1.1 Above code programs. (Amend to read as follows.) The code official or other authority having jurisdiction shall be permitted to deem a national, state or local energy efficiency program to exceed the energy efficiency required by this code. Buildings approved in writing by such an energy efficiency program shall be considered in compliance with this code. Two sets of compliance statements, such as but not limited to either a REScheck or COMcheck or equal approved energy efficiency program, are required to be submitted by the person responsible for the construction drawings. If a licensed design professional is responsible, these sets are to be signed and sealed by the design professional. The requirements identified as "mandatory" in Chapters 4 and 5 of this code, as applicable, shall be met.

~~Section 106.1 General. (Amend to read as follows.) The codes and standards referenced in this code shall be those listed in Chapter 6, and such codes and standards shall be considered as part of the requirements of this code to the prescribed extent of each such reference.~~

SECTION 2. This Ordinance shall be in full force and effect from and after its passage, approval and publication.

smart. with heart.
50 Raupp Blvd, Buffalo Grove, IL 60089 847-459-2500 vbg.org

AYES: _____
NAYES: _____
ABSENT: _____
PASSED: _____, 2025
APPROVED: _____, 2025
PUBLISHED: _____, 2025

ATTEST:

_____
Janet M. Sirabian, Village Clerk

APPROVED:

_____
Eric N. Smith, Village President

DRAFT

smart. with heart.
50 Raupp Blvd, Buffalo Grove, IL 60089 847-459-2500 vbg.org

AGENDA ITEM SUMMARY

BUFFALO GROVE VILLAGE BOARD

Regular Meeting: March 17, 2025

AGENDA ITEM 8.I. O-2025-42
Ordinance authorizing the Disposal and Sale of Surplus Property

Contacts

Liaison: Trustee Bocek
Staff: Brian Budds

Staff Recommendation

Staff recommends approval.

Recommended Motion

I move to approve an Ordinance authorizing the disposal and sale of surplus property.

Summary

Please see the attached memorandum.

Strategic Alignment

Guiding Principle

Principle 1: Financially Responsible and Sound
Principle 6: Engages Our Residents

Goal

Goal 3: Strengthened Buffalo Grove community identity and pride

File Attachments

1. Surplus Vehicle Request_
2. BOT 3.17.25_Ord Authorizing the Disposal of Surplus Property (police car)

smart. with heart.
50 Raupp Blvd, Buffalo Grove, IL 60089 847-459-2500 vbg.org

MEMORANDUM

DATE:	March 3, 2025
TO:	Dane C. Bragg, Village Manager
FROM:	Brian J. Budds, Chief of Police
SUBJECT:	Surplus Vehicle Request

RECOMMENDATION

Staff recommends approval of an Ordinance declaring surplus property and permitting the sale of a retired squad car for $1 to support fundraising efforts for the Special Olympics of Illinois and other charitable organizations.

BACKGROUND

In 2019, the Village Board approved the sale of a retired squad car to BG Officer Shannon McMillon for $1 with the goal of utilizing it as a public relations and fundraising tool for the Law Enforcement Torch Run Program through Special Olympics of Illinois. Through generous donations and personally volunteered time, that vehicle has been transformed into a functional race car that has helped generate over $200,000 in fundraising efforts, including $12,000 specifically via "5-0 Racing" events including a 1st place finish at the "5-0" rally in 2024. The "Donut Race Car" has also been on display at countless department and village sponsored functions including National Night Out and BG Days.

Public Works is currently in possession of a retired squad car removed from service and Public Works Manager Josh Wallace has advised that it is valued at no more than $2,500. I am requesting the Village Board to permit BG Police Officer Robert Gasca to purchase the car for $1, which will then be converted into a mock-up of the original race car for public engagement. Ofc. Gasca will then license, title and insure the vehicle in his name. The vehicle is a white 2010 Ford Crown Victoria Police Interceptor with VIN: 2FABP7BV0AX128026.

The vehicle would be stored in the west or east parking lots of the Police Department with the original fundraising vehicle so that they are readily available for public engagement and fundraising events.

smart. with heart.
50 Raupp Boulevard, Buffalo Grove, IL 60089 847-459-2500 vbg.org

NEXT STEPS

If approved by the Village Board, staff will coordinate with the disposition of the vehicle.

smart. with heart.
50 Raupp Boulevard, Buffalo Grove, IL 60089 847-459-2500 vbg.org

ORDINANCE 2025-xxx

AN ORDINANCE AUTHORIZING THE DISPOSAL AND SALE OF SURPLUS VILLAGE PERSONAL PROPERTY

WHEREAS the Village of Buffalo Grove is a home rule unit pursuant to the Illinois Constitution of 1970; and

WHEREAS the President and Board of Trustees of the Village of Buffalo Grove find that the listed retired squad car identified as white 2010 Ford Crown Victoria Police Interceptor with VIN: 2FABP7BV0AX128026 now owned by the Village of Buffalo Grove is no longer necessary or useful to the Village of Buffalo Grove and the best interests of the Village will be served by disposal; and

WHEREAS in an effort to support Special Olympics of Illinois and other charitable organizations, the Village permits the sale of the retired squad to Buffalo Grove Officer Shannon McMillon for $1 with the goal of utilizing it as a public relations and fundraising tool for the Law Enforcement Torch Run Program through Special Olympics of Illinois.

NOW THEREFORE BE IT ORDAINED by the President and Board of Trustees of the Village of Buffalo Grove, Cook and Lake Counties, Illinois, as follows:

SECTION 1. Pursuant to our Home Rule powers, the President and Board of Trustees of the Village of Buffalo Grove find that the listed vehicle no longer necessary or useful to the Village of Buffalo Grove and the best interests of the Village will be served by disposal and sale to Buffalo Grove Officer Shannon McMillon for $1.

SECTION 2. This Ordinance shall be in full force and effect from and after its passage and approval. This ordinance shall not be codified.

SECTION 3. If any item or portion of this Ordinance is for any reason held invalid, such decision shall not affect the validity of the remaining portion of such item or the remaining portion of this Ordinance

SECTION 4. This Ordinance shall be in full force and effect from and after its passage and approval and shall not be codified.

AYES: _____
NAYES: _____
ABSENT: _____
PASSED: _____, 2025
APPROVED: _____, 2025
PUBLISHED: _____, 2025

DRAFT

smart. with heart.
50 Raupp Blvd, Buffalo Grove, IL 60089 847-459-2500 vbg.org

ATTEST:

Janet M. Sirabian, Village Clerk

APPROVED:

Eric N. Smith, Village President

DRAFT

smart. with heart.
50 Raupp Blvd, Buffalo Grove, IL 60089 847-459-2500 vbg.org

AGENDA ITEM SUMMARY

BUFFALO GROVE VILLAGE BOARD

Regular Meeting: March 17, 2025

AGENDA ITEM 8.m. O-2025-43
Ordinance Authorizing a Contract with ASTI Sawing, INC. for the 2025 Sidewalk Cutting Project

Contacts

Liaison: Trustee Stein
Staff: Briget Schwab

Staff Recommendation

Staff recommends approval.

Recommended Motion

I move to approve an Ordinance authorizing the execution of a Contract with ASTI Sawing, INC. for the 2025 Sidewalk Cutting Project.

Summary

Recomendation

Staff recommends the Village Manager be authorized to enter into a contract with ASTI Sawing, Inc. for the evaluation and corrective repairs to sidewalks along various streets for an amount not to exceed $100,000.00. This project will be funded by the General Fund.

Background

Sidewalk cutting is a cost-effective way to remove vertical displacement between sidewalk panels/squares without having to remove and replace whole portions of otherwise sound concrete. Most sidewalk cutting requires staff or consultants to walk the sidewalk, identify and document needed repairs, and then provide locations for the repairs for a contractor to complete repair work. ASTI Sawing, Inc. streamlines the process and will handle all of steps starting with the evaluation and ending with compliant sidewalk with a documented location. ASTI Sawing, Inc utilizes a patented mechanical process that meets the slope standards for The Americans with Disabilities Act (ADA) and PROWAG, is clean and efficient with minimal disruption to the neighborhood.

At the December 2, 2024 Village Board Meeting, Staff was approved to seek Request for Proposals for this work effort. To ensure competitive pricing, Staff also requested a proposal from SafeSteps which is another concrete cutting contractor performing similar cutting, inspection, and documentation work. ASTI Sawing, INC. provided a more competitive price and has completed this work for nearby suburbs including Arlington Heights, Mount Prospect, and

smart. with heart.
50 Raupp Blvd, Buffalo Grove, IL 60089 847-459-2500 vbg.org

Naperville with satisfactory results. The 2025 Sidewalk Cutting Project will include the evaluation of Village sidewalk within the neighborhoods south of Lake Cook Road.

This project is expected to start mid-June and be completed by mid-August.

Strategic Alignment

Guiding Principle

Principle 3: Plan and Invest in the Future

Goal

Goal 1: Maintained effective village government: fiscally responsible and providing outstanding, responsive services

File Attachments

1. DRAFT Ordinance - 2025 Sidewalk Sawcutting
2. Construction Contract 2025 Sidewalk Cutting Project

smart. with heart.
50 Raupp Blvd, Buffalo Grove, IL 60089 847-459-2500 vbg.org

ORDINANCE 2025-xxx

AN ORDINANCE AUTHORIZING A CONTRACT WITH ASTI SAWING, INC. FOR THE 2025 SIDEWALK CUTTING PROJECT

WHEREAS the Village of Buffalo Grove is a home rule unit pursuant to the Illinois Constitution of 1970; and

WHEREAS the Village seeks to enter into a contract with ASTI Sawing, INC. for the 2025 Sidewalk Cutting Project.

NOW THEREFORE BE IT ORDAINED by the President and Board of Trustees of the Village of Buffalo Grove, Cook and Lake Counties, Illinois, as follows:

SECTION 1. The foregoing recitals are hereby adopted and incorporated and made a part of this Ordinance as if fully set forth herein.

SECTION 2. The Village Manager is authorized to execute a contract with ASTI Sawing, INC. for the 2025 Sidewalk Cutting Project at a price not to exceed $100,000, pending attorney review.

SECTION 3. If any section, paragraph, clause or provision of this Ordinance shall be held invalid, the invalidity thereof shall not affect any other provision of this Ordinance.

SECTION 4. This Ordinance shall be in full force and effect from and after its passage and approval and shall not be codified.

AYES: _____
NAYES: _____
ABSENT: _____
PASSED: _____, 2025
APPROVED: _____, 2025
PUBLISHED: _____, 2025

ATTEST:

_____
Janet M. Sirabian, Village Clerk

APPROVED:

_____
Eric N. Smith, Village President

DRAFT

smart. with heart.
50 Raupp Blvd, Buffalo Grove, IL 60089 847-459-2500 vbg.org

2025 Sidewalk Cutting Project

The 2025 Sidewalk Cutting Project (the "**Contract**") is entered between the Village of Buffalo Grove (hereinafter the "**Village**" or "**Owner**"), an Illinois home-rule unit of government, and ASTI Sawing, INC a [sawcutting contractor] (hereinafter the "**Contractor**") on this ___ day of __March_____, 2025 (the "**Effective Date**"). The Village and the Contractor are hereinafter sometimes collectively referred to as the "**Parties**" and individually as a "**Party**".

RECITALS

WHEREAS, the Village has solicited bids for the Work (defined below), Contractor has submitted a bid for the Work and Village has selected Contractor for the Work based on their bid; and

WHEREAS, the Contractor wishes to enter into this Contract with the Village and the Village wishes to enter into this Contract with the Contractor for the Work;

NOW THEREFORE, for and in consideration of the mutual covenants and promises herein contained, the adequacy and sufficiency of which are hereby acknowledged by the Parties, it is agreed as follows:

ARTICLE I - WORK TO BE DONE BY THE CONTRACTOR

The Village does hereby hire and contract with the Contractor to provide all the labor, equipment, materials and/or services described more thoroughly on Contract **Exhibit A** (the "**Work**") which is incorporated into the Contract by this reference.

ARTICLE II - CONTRACT DOCUMENTS

The following exhibits are attached hereto and incorporated herein by this reference:

Contract Exhibit A – Description of the Work
Contract Exhibit B – Schedule of Prices
Contract Exhibit C – Performance and Payment Bond
Contract Exhibit D – Partial Lien Waiver
Contract Exhibit E – Final Lien Waiver

If any term or provision of this Contract shall conflict with any term or provision of the exhibits referenced above, the terms and provisions of the exhibit shall control.

ARTICLE III - CONTRACT AMOUNT

The Village agrees to pay the Contractor for the proper and timely performance of the Work in strict accordance with this Contract as detailed in **Contract Exhibit B (**the **"Schedule of Prices")** Unless explicitly provided otherwise in this Contract, the detailed sums shall be the full and exclusive compensation owed to the Contractor for the Work; and Contractor may not seek additional payments from the Village.

The Village of Buffalo Grove reserves the right to reject a proposed price increase and terminate the Contract.

ARTICLE IV – APPLICATION FOR PAYMENT

The Contractor shall be paid at most once a month and only after providing the Village the following:

1. An executed and notarized Contractor's Sworn Statement in a form similar to AIA G702 or AIA G703;
2. Either a partial or final lien waiver from every subcontractor, sub-subcontractor, or materialman in substantially the same form as attached here as **Contract Exhibit D** and **Contract Exhibit E**;
3. Certified payroll necessary for the Prevailing Wage Act; and

All payments under this Contract must be approved by the Village's Board at regularly scheduled meetings. The Village reserves the right to request any receipts, invoices, proof of payments as the Village, in its sole discretion, may deem necessary to justify the payment requested *prior* to paying the requested payment. The Contractor shall furnish with his final application for payment a Final Lien Waiver from itself and, if not already provided, from every subcontractor and materialman of the Work.

The Contractor acknowledges that the Village is a unit of local government and that all payments under the Contract are subject to the Local Government Prompt Payment Act, 50 ILCS 505 et seq. To that extent, the Village shall have forty-five calendar (45) days from receipt of a bill or invoice to pay the same before it is considered late under the Contract. Interest, if any, charged for any late payments will be subject to the interest rate caps specified in the Prompt Payment Act.

ARTICLE V – CONTRACT TIME

Term. The Contractor shall fully, and not substantially, complete all the Work and the Work shall be accepted by the Director of Public Works, provided that acceptance by the Director of Public Works shall not be unreasonably delayed, on or before August 15, 2025.

If the Contractor shall fail to complete the work within the Contract Time which shall include any proper extension granted by the Village, the Contractor shall pay to the Village an amount equal to Five Hundred dollars ($500) per calendar day for each day past the Contract Time until final acceptance by the Village, as liquidated damages and not as a penalty.

Termination of Contract. The Contract may be terminated, in whole or in part, by either party if the other party substantially fails to fulfill its obligations under the Contract through no fault of the terminating party; or the Village may terminate the Contract, in whole or in part, for its convenience. However, no such termination may be effected unless the terminating party gives the other party: (1) not less than thirty (30) calendar days written notice by certified mail of intent to terminate, and (2) an opportunity for a meeting with the terminating party before termination.

ARTICLE VI – PERFORMANCE and PAYMENT BOND

The Contractor shall provide the Village with a performance and payment bond in substantially the same form as on **Contract Exhibit C** (the "**Performance and Payment Bond**") prior to Contractor beginning any Work and within 10 calendar days of the Notice of Award sent to the Contractor.

ARTICLE VII – ACCIDENT PREVENTION

The Contractor shall exercise every precaution at all times to protect itself, the property of the Village and the property of others. The safety provision of all applicable laws and ordinances shall be strictly observed by the Contractor at all times. Any practice deemed hazardous or dangerous by the Director of Public Works or his authorized representatives shall be immediately discontinued by the Contractor upon receipt of instructions from the Director of Public Works or his authorized representatives. To the fullest extent permitted by law, the Contractor shall be solely responsible for all safety-related matters.

ARTICLE VIII – INDEMNIFICATION

To the fullest extent permitted by law, the Contractor agrees to defend, pay on behalf of, indemnify, and hold harmless the Village, its elected and appointed officials, agents, employees and volunteers and others working on behalf of the Village against any and all claims, demands, suits or loss, including all costs connected therewith, and for any damages which may be asserted, claimed or recovered against or from the Village, its elected and appointed officials, agents, employees and volunteers and others working on behalf of the Village, by reason of personal injury, including bodily injury and death, and/or property damage, whether damage to property of the Village or of a third party, including loss of use thereof, which arises out of or is in any way connected or associated with the Contract and the Work.

ARTICLE IX – CONTRACTORS INSURANCE

Contractor shall procure and maintain, for the duration of the Contract and any maintenance period, insurance against claims for injuries to persons or damages to property, which may arise from or in connection with the performance of the work hereunder by the Contractor, his agents, representatives, employees or subcontractors.

A. Minimum Scope of Insurance: Coverage shall be at least as broad as:

Insurance Services Office Commercial General Liability occurrence form CG 0001 with the Village of Buffalo Grove named as additional insured on a primary and non-contributory basis. This primary, non-contributory additional insured coverage shall be confirmed through the following required policy endorsements: ISO Additional Insured Endorsement CG 20 10 or CG 20 26 and CG 20 01 04 13

1. Insurance Services Office Commercial General Liability occurrence form CG 0001 with the Village named as additional insured, on a form at least as broad as the ISO Additional Insured Endorsement CG 2010 and CG 2026
2. Insurance Service Office Business Auto Liability coverage form number CA 0001, Symbol 01 "Any Auto."
3. Workers' Compensation as required by the Labor Code of the State of Illinois and Employers' Liability insurance.
4. Owners and Contractors Protective Liability (OCP) policy with the Village of Buffalo Grove as insured.
5. Builder Risk Property Coverage with Village as loss payee

B. Minimum Limits of Insurance: Contractor shall maintain limits no less than:

1. Commercial General Liability: $1,000,000 combined single limit per occurrence for bodily injury, personal injury and property damage. The general aggregate shall be twice the required occurrence limit. Minimum General Aggregate shall be no less than $2,000,000 or a project/contract specific aggregate of $1,000,000.
2. Business Automobile Liability: $1,000,000 combined single limit per accident for bodily injury and property damage.
3. Workers' Compensation and Employers' Liability: Workers' Compensation coverage with statutory limits and Employers' Liability limits of $500,000 per accident.
4. Owners and Contractors Protective Liability (OCP): $1,000,000 combined single limit per occurrence for bodily injury and property damage.
5. Builder's Risk: Shall insure against "All Risk" of physical damage, including water damage (flood and hydrostatic pressure not excluded), on a completed replacement cost basis.

C. Deductibles and Self-Insured Retentions

Any deductibles or self-insured retentions must be declared to and approved by the Village. At the option of the Village, either: the insurer shall reduce or eliminate such deductibles or self-insured retentions as it respects the Village, its officials, agents, employees and volunteers; or the Contractor shall procure a bond guaranteeing payment of losses and related investigation, claim administration and defense expenses.

D. Other Insurance Provisions

The policies are to contain, or be endorsed to contain, the following provisions:

1. General Liability and Automobile Liability Coverages:
    a. The Village, its officials, agents, employees and volunteers are to be covered as insureds as respects: liability arising out of activities performed by or on behalf of the Contractor; products and completed operations of the Contractor; premises owned, leased or used by the Contractor; or automobiles owned, leased, hired or borrowed by the Contractor. The coverage shall contain no special limitations on the scope of protection afforded to the Village, its officials, agents, employees and volunteers.
2. The Contractor's insurance coverage shall be primary and non-contributory as respects the Village, its officials, agents, employees and volunteers. Any insurance or self-insurance maintained by the Village, its officials, agents, employees and volunteers shall be excess of Contractor's insurance and shall not contribute with it.
3. Any failure to comply with reporting provisions of the policies shall not affect coverage provided to the Village, its officials, agents, employees and volunteers.
4. The Contractor's insurance shall contain a Severability of Interests/Cross Liability clause or language stating that Contractor's insurance shall apply separately to each insured against whom claim is made or suit is brought, except with respect to the limits of the insurer's liability.
5. If any commercial general liability insurance is being provided under an excess or umbrella liability policy that does not “follow form,” then the Contractor shall be required to name the Village, its officials, employees, agents and volunteers as additional insureds
6. All general liability coverages shall be provided on an occurrence policy form. Claims-made general liability policies will not be accepted.
7. The contractor and all subcontractors hereby agree to waive any limitation as to the amount of contribution recoverable against them by the Village. This specifically includes any limitation imposed by any state statute, regulation, or case law including any Workers’ Compensation Act provision that applies a limitation to the amount recoverable in contribution such as Kotecki v. Cyclops Welding

E. All Coverages:

1. No Waiver. Under no circumstances shall the Village be deemed to have waived any of the insurance requirements of this Contract by any act or omission, including, but not limited to:
    a. Allowing work by Contractor or any subcontractor to start before receipt of Certificates of Insurance and Additional Insured Endorsements.
    b. Failure to examine, or to demand correction of any deficiency, of any Certificate of Insurance and Additional Insured Endorsement received.
2. Each insurance policy required shall have the Village expressly endorsed onto the policy as a Cancellation Notice Recipient. Should any of the policies be cancelled before the expiration date thereof, notice will be delivered in accordance with the policy provisions.

F. Acceptability of Insurers

Insurance is to be placed with insurers with a Best's rating of no less than A-, VII and licensed to do business in the State of Illinois.

G. Verification of Coverage

Contractor shall furnish the Village with certificates of insurance naming the Village, its officials, agents, employees, and volunteers as additional insured's and with original endorsements, affecting coverage required herein. The certificates and endorsements for each insurance policy are to be signed by a person authorized by that insurer to bind coverage on its behalf. The certificates and endorsements are to be received and approved by the Village before any work commences. The Village reserves the right to request full certified copies of the insurance policies and endorsements.

The Certificate of Insurance shall state the Village of Buffalo Grove has been endorsed as an "additional insured" by the Vendor's insurance carrier. Specifically, this Certificate must include the following language: **"The Village of Buffalo Grove, and it's respective elected and appointed officials, employees, agents, consultants, attorneys and representatives, are, and have been endorsed, as an additional insured under the above reference policy number_____ on a primary and non-contributory basis for general liability and automobile liability coverage for the duration of the agreement term."**

H. Subcontractors

Contractor shall include all subcontractors as insured's under its policies or shall furnish separate certificates and endorsements for each subcontractor. All coverage's for subcontractors shall be subject to all of the requirements stated herein.

I. Assumption of Liability

The contractor assumes liability for all injury to or death of any person or persons including employees of the contractor, any subcontractor, any supplier or any other person and assumes liability for all damage to property sustained by any person or persons occasioned by or in any way arising out of any work performed pursuant to the Contract.

J. Workers' Compensation and Employers' Liability Coverage

The insurer shall agree to waive all rights of subrogation against the Village of Buffalo Grove, its officials, employees, agents and volunteers for losses arising from work performed by Contractor for the municipality.

K. Failure to Comply

In the event the Contractor fails to obtain or maintain any insurance coverage's required under this contract, The Village may purchase such insurance coverage's and charge the expense thereof to the Contractor.

ARTICLE X – CERTIFICATE OF AUTHORITY AND SURETY CERTIFICATE

The Contractor shall furnish the Village with a current Certificate of Authority or Surety Certificate issued by the Illinois Department of Insurance for the bonding company and insurance company they are using. In lieu of a Certificate of Authority of Surety Certificate, the Contractor may provide certificate of good standing from the Illinois Department of Insurance's website.

ARTICLE XI – COPYRIGHTS AND LICENSES

The Contractor agrees that all documents of any kind whatsoever, and in whatever medium expressed, prepared by the Contractor and the Contractor's consultants in connection with the Work (collectively, the "**Documents**") or otherwise pursuant to this Contract and all rights therein (including trademarks, trade names, rights or use, copyrights and/or other proprietary rights) shall be and remain the sole property of the Village (regardless of whether the Village or the Contractor terminates this Contract for any reason whatsoever). The Contractor hereby agrees that the Documents are or shall be deemed to be "Works for Hire" within the meaning of Section 101 of the Copyright Act, and the Contractor hereby assigns to the Village all right, title and interest therein. Notwithstanding, the Contractor shall indemnify and hold harmless the Village, its appointed and elected officials, employees, agents and volunteers from and against all claims, damages, losses, and expenses (including attorneys' fees and court and arbitration costs) arising out of any infringement of patent rights or copyrights incident to the Documents and the Work.

ARTICLE XII – NOTICE

All notices, demands, requests, consents, approvals and other communications required or permitted to be given hereunder (a "**Notice**") shall be in writing and shall be deemed effective three (3) business days after mailing if mailed by certified mail with return receipt requested and immediately if served personally, and shall be addressed to the following:

IF TO THE VILLAGE:	Village of Buffalo Grove 50 Raupp Blvd Buffalo Grove, IL 60089 bfschwab@vbg.org ATTN: Briget Schwab, PE, Assistant Village Engineer
WITH COPIES TO:	Cc: pbrankin@schainbanks.com Cc:tcwisniewski@vbg.org
IF TO THE CONTRACTOR:	ASTI Sawing, INC 7454 US Hwy 18-151 Barneveld, WI 53507 astisawing@gmail.com 469-934-3475 ATTN: Dave Sollie, General Manager

ARTICLE XIII – CHANGE ORDERS

If the Village requests any change to the Work the Village shall do so by delivering Notice of the same to the Contractor and the change requested by the Village shall be effective upon receipt of the Notice by the Contractor. The Contractor may propose a change to the Work by delivering Notice of the proposed change along with a description of the changes full effect on the Work to the Village; provided, such requested change shall not be deemed accepted until the Village has delivered to the Contractor Notice of the same. Prior to approving a proposed change to the Work by the Contractor, the Village may request such additional documentation as it deems necessary to investigate the proposed change. The Contractor shall be responsible for informing all its employees and subcontractors of any changes to the Work, whether such change is requested by the Contractor or the Village.

ARTICLE XIV – NOTICE OF STARTING WORK

The Contractor shall provide Notice to the Village prior to the Contractor, or its employees or subcontractors, starting the Work or any phase of the Work.

ARTICLE XV – SEQUENCE OF THE WORK

The Director of Public Works shall have the power to direct the order and sequence of the Work. On any major portion of the Work, all accessories shall be set coincident with the main construction. Payment for major portions of the Work may be withheld until proper completion of accessories.

ARTICLE XVI – SUPERVISION

The Director of Public Works shall have override power to superintend and direct the Work, and the Contractor shall perform all of the Work herein specified to the satisfaction, approval and acceptance of the Director of Public Works. The Contractor shall have at all times a competent foreman or superintendent at the Work's site, who shall have full authority to act for the Contractor and to receive and execute orders from the Director of Public Works, and any instructions given to such superintendant or person, executing work for the Contractor, shall be binding on the Contractor as though it was personally given to the Contractor.

ARTICLE XVII – STANDARD OF WORK AND WORKERS

The Contractor shall employ competent staff and shall discharge, at the request of the Director of Public Works, any incompetent, unfaithful, abusive or disorderly workers in its employ. Where experts or skilled workers must be employed, only expert or skilled workers shall be employed.

ARTICLE XVIII – CONDITIONS OF THE WORK SITE

The Contractor shall provide and maintain such sanitary accommodations for the use of its employees as may be necessary to comply with the State and local Board of Health requirements. Public nuisances will not be permitted. The Contractor shall leave said Work's site(s) in the best possible condition to the complete satisfaction of the Director of Public Works. No vehicles of any kind shall be placed, parked, or operated upon any grass areas at any time except as authorized by the Director of Public Works or his authorized representative. Further, the Contractor shall exercise every precaution for the protection of all persons and all property. The safety provisions of all-applicable laws and ordinances shall be strictly observed. Any practice hazardous in the opinion of the Director of Public Works or his authorized representatives shall be immediately discontinued by the Contractor upon his receipt of instructions from the Director of Public Works or his authorized representative. To the maximum extent permitted by law, the Contractor shall be responsible for all safety-related matters.

ARTICLE XIX – WARRANTY PERIOD

All material and workmanship shall be warranted and guaranteed according to manufacturer's recommendation after inspection and approval by the Director of Public Works or his designated representative. All work performed by the Contractor shall be warranted by the Contractor following completion and final acceptance of the Work for a period of twelve (12) months from the date of final, and not substantial, completion.

ARTICLE XX – ACCIDENTS

In the event of any accident of any kind that involves the general public or property of the Village or a third party, the Contractor shall immediately notify the Director of Public Works by phone as well as provide Notice of the same. The Notice shall include a full accounting of all details of the accident. The Contractor shall furnish the Village with copies of all reports of such accidents at the same time that the reports are forwarded to any other interested parties.

ARTICLE XXI – NO ASSIGNMENT

If the Contractor sublets or assigns any part of the Work then the Contractor shall not under any circumstances be relieved of its liabilities hereunder. All transactions of the Village shall be with the Contractor. Subcontractors shall be recognized only in the capacity of employees or workmen and shall be subject to the same requirements as to character and competence. The Contractor shall not assign, transfer, convey, sell or otherwise dispose of the whole or any part of this Contract to any person, firm or corporation without written consent of the Director of Public Works or his authorized representative.

ARTICLE XXII – DEFAULT

The following shall constitute a default an "**Event of Default**" by the Contractor under this Contract:

A. If the Contractor shall fail to strictly observe or perform one or more of the terms, conditions, covenants and agreements of this Contract;

B. If there shall be placed on any property owned by the Village any mechanics', materialmens' or suppliers' lien;

C. If there shall be instituted any proceeding against the Contractor seeking liquidation, dissolution or similar relief and the same shall not be dismissed within forty-five (45) calendar days;

D. If there shall be appointed any trustee, receiver or liquidator of the Contractor and such appointment shall not have been vacated within forty-five (45) calendar days; and

E. If the Contractor fails to maintain or obtain any and all permits, licenses and the like, if any, required by the Village, State or Federal governments for the Work.

Upon any Event of Default the Village shall have the option of (**i**) terminating the Contract; (**ii**) pursuing any remedy available to it at law or in equity; or (**iii**) pursuing both simultaneously. In addition, upon an Event of Default, the Village may withhold payments due to the Contractor until it has hired a replacement of the Contractor and deducted all costs of hiring a replacement.

ARTICLE XXIII – DELAYS

The Contractor shall not be liable in damages for delays in performance when such delay is the result of fire, flood, strike, acts of God, or by any other circumstances which are beyond the control of the Contractor; provided, however, under such circumstances the Village may, at its option, cancel the Contract.

ARTICLE XXIV – COMPLIANCE WITH LAWS

The Contractor shall comply with all applicable laws, regulations and rules promulgated by any federal, state, local, or other governmental authority or regulatory body pertaining to all aspects of the Work, now in effect, or which may become in effect during the performance of the Work. The scope of the laws, regulations, and rules referred to in this paragraph includes, but is in no way limited to, the Illinois Human Rights Act, Illinois Equal Pay Act of 2003, Occupational Safety & Health Act along with the standards and regulations promulgated pursuant thereto (including but not limited to those safety requirements involving work on elevated platforms), all forms of traffic regulations, public utility, Interstate and Intrastate Commerce Commission regulations, Workers' Compensation Laws, Public Construction Bond Act, Public Works Preference Act, Employment of Illinois Workers on Public Works Act, USA Security Act, federal Social Security Act (and any of its titles), and any other law, rule or regulation of the Illinois Department of Labor, Department of Transportation, Illinois Environmental Protection Act, Illinois Department of Natural Resources, Illinois Department of Human Rights, Human Rights Commission, EEOC, and the Village of Buffalo Grove. Notwithstanding the following, the Contractor shall particularly note that:

A. NO DISCRIMINATION – The Contractor shall comply with the provisions of the Illinois Public Works Employment Discrimination Act and the Illinois Human Rights Act/Equal Opportunity Clause which, pursuant to Illinois law, are deemed to be part of this Contract.

B. FREEDOM OF INFORMATION - The Contractor agrees to furnish all documentation related to the Contract, the Work and any documentation related to the Village required under an Illinois Freedom of Information Act (ILCS 140/1 et. seq.) ("**FOIA**") request within five (5) calendar days after the Village issues Notice of such request to the Contractor. The Contractor agrees to defend, indemnify and hold harmless the Village, and agrees to pay all reasonable costs connected therewith (including, but not limited to attorney's and witness fees, filing fees and any other expenses) for the Village to defend any and all causes, actions, causes of action, disputes, prosecutions, or conflicts arising from Contractor's actual or alleged violation of FOIA or the Contractor's failure to furnish all documentation related to a FOIA request within five (5) calendar days after Notice from the Village for the same. Furthermore, should the Contractor request that the Village utilize a lawful exemption under FOIA in relation to any FOIA request thereby denying that request, Contractor agrees to pay all costs connected therewith (such as attorneys' and witness fees, filing fees and any other expenses) to defend the denial of the request. This defense shall include, but not be limited to, any challenged or appealed denials of FOIA requests to either the Illinois Attorney General or a court of competent jurisdiction.

C. ILLINOIS WORKERS ON PUBLIC WORKS ACT - To the extent applicable, the Contractor shall comply with the Illinois Workers on Public Works Act, 30 ILCS 570/1 et seq., and shall provide to the Village any supporting documentation necessary to show such compliance.

D. NOT A BLOCKED PERSON - The Contractor affirms and covenants that neither the Contractor nor any individual employed by the Contractor for this Work or under this Contract is a person forbidden from doing business with a unit of local government under Executive Order No. 13224 (Sept 23, 2001), 66 Fed.Reg. 49,079 (Sept 23, 2001) or is a person registered on the Specially Designated Nationals and Blocked Persons List. The Contractor shall indemnify the Village from all costs associated with failure to comply with this paragraph.

E. SUBSTANCE ABUSE PREVENTION ON PUBLIC WORKS ACT - The Contractor knows, understands and acknowledges its obligations under the Substance Abuse Prevention on Public Works Act (820 ILCS 265/1 et seq.), and shall comply and require all subcontractors and lower tiered contractors to comply with the requirements and provisions thereof.

F. PREVAILING WAGE ACT - The Village is an Illinois unit of local government and the Work hereunder is subject to the Illinois Prevailing Wage Act, 820 ILCS 130/0.01, et seq.

Pursuant to PA 100-1177 the Illinois Department of Labor (IDOL) has activated an electronic database (Payroll Portal) capable of accepting and retaining certified payrolls submitted under the State of Illinois Prevailing Wage Act (820 ILCS/130/1). All contractors and subcontractors completing work for the Village of Buffalo Grove pursuant to the Act must submit all certified payroll through the IDOL Payroll Portal.

Consequently, the Contractor and each subcontractor shall submit with their application for payment(s) the email certification received from their IDOL Payroll Portal submittal with each of their pay requests. Any delay in processing the payments due to a lack of aforementioned email certification shall not be an event of default by the Village and shall not excuse any delay by the Contractor who shall proceed with the Work as if no delay in payment has occurred. The Contractor and Village shall agree to take any further steps not outlined above to ensure compliance with the Prevailing Wage Act. Upon two business days' Notice, the Contractor and each subcontractor shall make available to the Village their records to confirm compliance with the Prevailing Wage Act. Finally, to ensure compliance with Prevailing Wage Act, the Contractor and each subcontractor shall keep for a period of not less than 5 years after the Work has been completed records of all laborers, mechanics, and other workers employed by them for the Work; the records shall include each worker's name, address, telephone number, classification or classifications, the hourly wages paid in each period, the number of hours worked each day, the starting and ending times of work each day and, when available, last four digits of the social security number

Current rates can be located on the Illinois Department of Labor website.
https://www2.illinois.gov/idol/Laws-Rules/CONMED/Pages/Rates.aspx

ARTICLE XXV – NO WAIVER OF RIGHTS

A waiver by the Village of any Event of Default or any term of provision of this Contract shall not be a waiver of the same Event of Default, another Event of Default or any other term or provision of this Contract.

ARTICLE XXVI – CONTROLLING LAW AND VENUE

This Contract is entered into in the State of Illinois, for work to be performed in the State of Illinois and shall be governed by and construed in accordance with the laws of the State of Illinois. Any legal matters or dispute shall be resolved in the Circuit Court of Cook County and the Parties hereby submit to the jurisdiction of such Circuit Court. This Contract shall be construed without regard to any presumption or other rule requiring construction against the Party causing the Contract to be drafted.

ARTICLE XXVII – MISCELLANEOUS

A. AMENDMENT – This Contract may be amended only in writing executed by both Parties.

B. NO RECORDING – This Contract, or a memorandum thereof, may not be recorded in any form by either Party. If either Party records this Contract, or a memorandum thereof, they shall immediately file a release of the same.

C. SECTION HEADINGS – The headings in the Contract are intended for convenience only and shall not be taken into consideration in any construction or interpretation of the Contract.

D. NO THIRD-PARTY BENEFICIARIES – This Contract does not confer any rights or benefits on any third party.

E. BINDING EFFECT – This Contract shall be binding and inure to the benefit of the Parties hereto, their respective legal representatives, heirs and successors-in-interest.

F. ENTIRE AGREEMENT – This Contract supersedes all prior agreements and understandings and constitutes the entire understanding between the Parties relating to the subject matter hereof.

G. SEVERABILITY - If any term, condition or provision of the Contract is adjudicated invalid or unenforceable, the remainder of the Contract shall not be affected and shall remain in full force and effect, to the fullest extent permitted by law.

H. TORT IMMUNITY DEFENSES - Nothing contained in this Contract is intended to constitute nor shall constitute a waiver of the rights, defenses, and immunities provided or available to the Village under the Local Governmental and Governmental Employees Tort Immunity Act, 745 ILCS 10 *et seq*.

I. CALENDAR DAYS AND TIME. Unless otherwise provided in this Contract, any reference in this Contract to "day" or "days" shall mean calendar days and not business days. If the date for giving of any notice required to be given, or the performance of any obligation, under this Contract falls on a Saturday, Sunday or federal holiday, then the notice or obligation may be given or performed on the next business day after that Saturday, Sunday or federal holiday.

J. COUNTERPARTS – This Contract may be executed by the Parties in any number of counterparts, each of which shall be deemed an original, but all of which together shall constitute an original instrument.

IN WITNESS WHEREOF, the Parties hereto have caused the Contract to be executed as of the Effective Date.

Village of Buffalo Grove,
an Illinois home-rule unit of government

By:_____
Name: Dane Bragg
Title: Village Manager

ASTI Sawing, INC.
[A Wisconsin concrete sawcutting company]

By:_____
Name: _____
Title: _____

CONTRACT EXHIBIT A& B- DESCRIPTION OF THE & WORK SCHEDULE OF PRICES

See following Proposal from ASTI Sawing, INC.

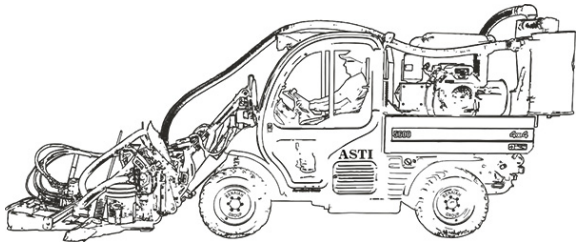

ASTI Sawing, Inc.

2/18/2025

Briget Schwab, Assistant Village Engineer
Village of Buffalo Grove
1650 Leider Ln
Buffalo Grove, IL 60089

Re: 2025 Sidewalk Saw Cutting Proposal

Briget,

ASTI Sawing, Inc. appreciates the opportunity to provide the Village of Buffalo Grove with a proposal to remove the sidewalk trip hazards by horizontal saw cutting. The work will be completed using our patented mechanical process that meets the slope standards for The Americans with Disabilities Act (ADA) and PROWAG, is clean and efficient with minimal disruption to the neighborhood.

The following pages includes an introduction, ASTI Sawing's patented technology used to perform the horizontal saw cutting, our experience, sidewalk surveying and cutting specifications, project details and 2025 Sidewalk Saw Cutting Proposal. The project will start on June 15, 2025 working through August 15th.

Sincerely,

Dave Sollie

Dave Sollie
ASTI Sawing, Inc.
7454 US Hwy 18-151
Barneveld, WI 53507
469-934-3475
astisawing@gmail.com

ASTI SAWING

ASTI Sawing's patented saw cutting technology has proven to be an industry leader since 2009. As the industry leader in removing sidewalk trip hazards with our mechanical technology and price, there are no other methods that are as consistent, clean and efficient that reduces the legal liability associated with sidewalk trip hazards.

The Americans with Disabilities Act (ADA) of 1990 defines a "trip hazard" as any vertical change of over 1/4 inch or more at any joint or crack. Sidewalk trip hazards have been a nuisance in municipalities for decades. Municipalities that strive to maintain their sidewalk infrastructure with only using "Remove & Replace" remediation has been difficult and very costly all the while attempting to provide a safe environmant and avoiding costly litigation from "trip & falls".

SERVICES OFFERED

ASTI Sawing provides municipalities with sidewalk surveying and the removal of sidewalk trip hazards. A sidewalk survey is completed by gathering information that is agreed upon with the municipality. The survey typically includes street number, street name, GPS Coordinates and height/width of the trip hazard. Each trip hazard that has been removed will be recorded containing the same information as listed in the survey along with a date/time stamp. The database will be emailed daily or weekly basis according to the contractual agreement.

ASTI Sawing's patented technology (Patented # 8,733,845) to mechanically remove sidewalk trip hazards by horizontal saw cutting was invented in 2009. The mechanical system was developed from seeing a manual process with the person hand cutting on their knees. Kevin Bollinger, Vice President of ASTI Sawing, Inc. and the Patent Owner, went on a mission combining his creative thinking and engineering implementing current cutting technologies along with his vision to make the removal of sidewalk trip hazards into a mechanical process. This process eliminates the need to pre-measure each cut, allowing the preset measurement between the cutter head apparatus mounted to the guide rails producing a consistent slope for every cut. This trip hazard removing apparatus includes a saw head and blade connected to guide rail(s), which are connected to a support structure, which is connected to lift arm(s) of a vehicle. The vehicle moves the trip hazard removing apparatus between trip hazards occurring between upper and lower slabs of a sidewalk, placing it on the lower slab adjacent to and in contact with a trip hazard, and lifting it after removing the trip hazard. A trip hazard engaging mechanism automatically locates the saw blade's position and angle relative to and above the upper slab to create appropriate transition surface(s) between the upper and lower slabs as it cuts off the trip hazard. The guide rail(s) allow

placing the saw blade facing the sidewalk's side surface. The saw head and blade are moved along the guide rail(s) across the upper slab and through the side surfaces to remove the trip hazard.

ASTI Sawing utilizes a Bobcat Toolcat 5600. The front of the Toolcat 5600 is fitted with a mechanical cutter mounted on a rail system using a 20" diamond blade. A hand cutter is also used to reach corners. The back of the Toolcat has three vacuums that collects the dust created while cutting mechanically and manually. The Toolcat 5600 is equipped with an additional wand and a hose that are connected to the vacuum system to remove debris in the hand cutting and cleaning up process on the sidewalk panel.

ADVANTAGES OF ASTI SAWING

Our sidewalk trip hazard elimination approach is simple – once the cutting apparatus is set at the contract's specified slope 1:12, there is no need to measure each individual trip hazard before the cut is initiated. The mechanism automatically locates the saw's blades position and angle relative to the vertical displacement and creates the appropriate transition (slope) while traveling along a guided rail system. Using our mechanical system with a 20" diamond blade will create a consistent uniformed cut every time. When the sidewalk edges of the trip hazard are up against walls, trees, railings or sprinkler heads, then the use of a hand cutter is implemented after the slope is originally set - finishing the cut leaving a uniform transition from edge to edge.

ASTI Sawing created a HEPA Filtered Vacuum System which eliminates the exposure to dust when saw cutting the vertical displacement. The debris is removed from the sidewalk panel and any residual particles are vacuumed up to complete the process.

EXPERIENCE

Kevin Bollinger, Vice President of ASTI Sawing, Inc. and the Patent Owner for the mechanical horizontal saw cutting technology, started removing sidewalk vertical displacements in 2009. Bollinger has cut concrete (slab sawing, core drilling, etc.), assessed sidewalk infrastructures, completed repairs utilizing his patented cutting technology and managed trip hazard elimination projects from start to finish.

Dave Sollie, General Manager for ASTI Sawing, Inc., has been working in the concrete cutting industry since 2004. Sollie has assessed sidewalk infrastructures, completed repairs utilizing the patented cutting equipment, managed trip hazard elimination projects from start to finish and is OSHA 30 Hour Construction Certified.

Combining the experience of Bollinger and Sollie, the two have completed projects for more than 72 municipalities, surveying over 690 miles and removing more than 117,510 sidewalk trip hazards.

2025 Sidewalk Saw Cutting Proposal:

Village of Buffalo Grove

GENERAL SURVEY AND CUTTING SPECIFICATIONS

ASTI Sawing will eliminate sidewalk trip hazards per the general specifications listed below along with the details listed specifically for the **Village of Buffalo Grove**. Sidewalk Surveying is completed by locating sidewalks with trip hazards which can be evaluated during the cutting process. Remediating the trip hazard is completed by using a mechanical **HORIZONTAL SAW CUTTING** apparatus which is guided on a rail system to remove the trip hazard.

Specific project details provided by the Village of Buffalo Grove:

- **Trip Hazard Range:** 0.75" up to 2.0"
- **Slope:** 1:12 (4.76° or 8.33%) meeting ADA and PROWAG requirements.
- **Saw Cuts:** Saw cuts will not leave ridges or grooves in the sidewalk that could inhibit or prevent drainage. Trip hazards shall be removed completely, from one edge of the sidewalk to the other, leaving zero vertical deflection between adjacent slabs in either direction.
- **Slip Coeffecient:** The finished surface shall have a coefficient of friction of at least 0.6.
- **Clean Up:** Debris will be removed and any residual particles on the sidewalk panel will be vacuumed up**.**
- **Reporting:** The documentation of the cut will include: Street Name and Number, Date & Time, GPS Coordinates, Cut Dimensions, Inch-Foot Calculations and Cut Cost.
- Work will be located in multiple Areas with adjoining streets per Area.
- Maps will be provided to ASTI for Area 1, Area 2 and Area 3 by the Village of Buffalo Grove.
- ASTI will locate the trip hazards to be removed in the given Area based on contract guidelines/specifications.
- Start date of June15, 2025 and completion date of August 15, 2025.

- **Unit Pricing is $24.80/InFt, not to exceed $100,000**.

The above price includes all fees for mobilization, cleanup and travel expenses.

Thank you for your consideration.

Dave Sollie

Dave Sollie
General Manager
469-934-3475
astisawing@gmail.com

Acceptance of the above proposal by:

Signature Date

Print Name Title

ASTI Sawing, Inc.
7454 US Hwy 18-151
Barneveld, WI 53507
www.astisawing.com

CONTRACT EXHIBIT C- FORM OF PERFORMANCE AND PAYMENT BOND

Bond Number: _____

KNOW ALL MEN BY THESE PRESENTS, That _____ (the "**Principal**") and _____ _____ (the "**Surety**"), are held and firmly bound unto the Village of Buffalo Grove, an Illinois home-rule unit of government (the "**Village**"), the full and just sum of _____Dollars ($_____) in lawful money of the UNITED STATES OF AMERICA as herein provided.

THE CONDITION OF THIS OBLIGATION is such that the Principal and Surety agree to bind themselves, their successors, assigns, executors, heirs and administrators, jointly and severally, for the full and faithful performance of the Work as defined in that particular Project Name contract between Principal and the Village dated __ day of _____, 20__, (hereinafter referred to as the "**Contract**"), a copy of which is attached and incorporated by reference as though fully set forth herein.

NOW THE CONDITIONS OF THIS OBLIGATION ARE SUCH that if the said Principal (**i**) shall in all respects keep and perform all the undertakings, covenants, terms, conditions and agreements of the Contract; (**ii**) shall pay all sums of money due or to become due, for any labor, materials, apparatus, fixtures or equipment furnished for the Work provided in said Contract; and (**iii**) shall remove and replace any defects in workmanship or materials which may be apparent or may develop within the ARTICLE XIX – WARRANTY PERIOD of the Contract, then this obligation shall be null and void; otherwise it shall remain in full force and effect.

And the said Surety, for value received, hereby stipulates and agrees that no change, extension of time, alteration or addition to the terms of the Contract or the Work thereunder shall in any way affect its obligation on this Bond, and it does hereby waive notice of any such change, extension of time, alteration or addition to the terms of the Contract or to the Work.

IN WITNESS WHEREOF, we have hereunto set our hands and sea ___ day of _____, 20__.

SURETY	**PRINCIPAL**
By: _____	**By:** _____
Name: _____	**Name:** _____
Title: _____	**Title:** _____
ATTEST	**ATTEST**
By: _____	**By:** _____

NOTE: Date of Bond must not be prior to date of Contract.
If Contractor is Partnership, all partners should execute Bond.
IMPORTANT: Surety companies executing Bonds must appear on the Treasury Departments most current list (Circular 570 as amended) and be authorized to transact business in the state where the Work is located.

CONTRACT EXHIBIT D- PARTIAL WAIVER

PARTIAL LIEN WAIVER

STATE OF ILLINOIS

COUNTY OF _____

TO WHOM IT MAY CONCERN:
WHEREAS the undersigned has been employed by _____
to furnish _____
for the premises known as _____
of which _____ is the owner.
THE undersigned, for and in consideration of _____
($_____
_____
) Dollars, and other good and valuable considerations, the receipt whereof is hereby acknowledged, do(es) hereby waive and release any and all lien or claim of, or right to, lien, under the statutes of the State of Illinois, relating to mechanics' liens, with respect to and on said above-described premises, and the improvements thereon, and on the material, fixtures, apparatus or machinery furnished, and on the moneys, funds or other considerations due or to become due from the owner, on account of all labor, services, material, fixtures, apparatus or machinery, furnished to this date by the undersigned for the above-described premises, INCLUDING EXTRAS.*
DATE _____ COMPANY NAME _____
ADDRESS _____
SIGNATURE AND TITLE _____

*EXTRAS INCLUDE BUT ARE NOT LIMITED TO CHANGE ORDERS, BOTH ORAL AND WRITTEN, TO THE CONTRACT

CONTRACTOR'S AFFIDAVIT

STATE OF ILLINOIS

COUNTY OF _____

TO WHOM IT MAY CONCERN:
THE UNDERSIGNED, (NAME) _____ BEING DULY SWORN, DEPOSES AND SAYS THAT HE OR SHE IS (POSITION) _____ OF (COMPANY NAME) _____ WHO IS THE CONTRACTOR FURNISHING _____ WORK ON THE BUILDING LOCATED AT _____
OWNED BY _____
That the total amount of the contract including extras* is $ _____ on which he or she has received payment of $ _____ prior to this payment. That all waivers are true, correct and genuine and delivered unconditionally and that there is no claim either legal or equitable to defeat the validity of said waivers. That the following are the names and addresses of all parties who have furnished or delivered material or labor, or both, for said work and all parties having contracts or sub contracts for specific portions of said work or for material entering into the construction thereof and the amount due or to become due to each, and that the items mentioned include all labor and material required to complete said work according to plans and specifications:

NAMES AND ADDRESSES	WHAT FOR	CONTRACT PRICE INCLDG EXTRAS*	AMOUNT PAID	THIS PAYMENT	BALANCE DUE
TOTAL LABOR AND MATERIAL INCLUDING EXTRAS* TO COMPLETE.					

That there are no other contracts for said work outstanding, and that there is nothing due or to become due to any person for material, labor or other work of any kind done or to be done upon or in connection with said work other than above stated.

DATE _____ SIGNATURE: _____

SUBSCRIBED AND SWORN TO BEFORE ME THIS _____ DAY OF _____, _____

*EXTRAS INCLUDE BUT ARE NOT LIMITED TO CHANGE ORDERS, BOTH ORAL AND WRITTEN, TO THE CONTRACT.

_____
NOTARY PUBLIC

CONTRACT EXHIBIT E- FINAL WAIVER

FINAL WAIVER OF LIEN

STATE OF ILLINOIS

COUNTY OF _____

TO WHOM IT MAY CONCERN:
WHEREAS the undersigned has been employed by _____
to furnish _____
for the premises known as _____
of which _____ is the owner.

THE undersigned, for and in consideration of _____
($_____) Dollars, and other good and valuable considerations, the receipt whereof is hereby acknowledged, do(es) hereby waive and release any and all lien or claim of, or right to, lien, under the statutes of the State of Illinois, relating to mechanics' liens, with respect to and on said above-described premises, and the improvements thereon, and on the material, fixtures, apparatus or machinery furnished, and on the moneys, funds or other considerations due or to become due from the owner, on account of all labor, services, material, fixtures, apparatus or machinery, heretofore furnished, or which may be furnished at any time hereafter, by the undersigned for the above-described premises, INCLUDING EXTRAS.*

DATE _____ COMPANY NAME _____
ADDRESS _____
SIGNATURE AND TITLE _____

*EXTRAS INCLUDE BUT ARE NOT LIMITED TO CHANGE ORDERS, BOTH ORAL AND WRITTEN, TO THE CONTRACT

CONTRACTOR'S AFFIDAVIT

STATE OF ILLINOIS

COUNTY OF _____

TO WHOM IT MAY CONCERN:
THE UNDERSIGNED, (NAME) _____ BEING DULY SWORN, DEPOSES AND SAYS THAT HE OR SHE IS (POSITION) _____ OF (COMPANY NAME) _____ WHO IS THE CONTRACTOR FURNISHING _____ WORK ON THE BUILDING LOCATED AT _____
OWNED BY _____
That the total amount of the contract including extras* is $ _____ on which he or she has received payment of $ _____ prior to this payment. That all waivers are true, correct and genuine and delivered unconditionally and that there is no claim either legal or equitable to defeat the validity of said waivers. That the following are the names and addresses of all parties who have furnished or delivered material or labor, or both, for said work and all parties having contracts or sub contracts for specific portions of said work or for material entering into the construction thereof and the amount due or to become due to each, and that the items mentioned include all labor and material required to complete said work according to plans and specifications:

NAMES AND ADDRESSES	WHAT FOR	CONTRACT PRICE INCLDG	AMOUNT PAID	THIS PAYMENT	BALANCE DUE
TOTAL LABOR AND MATERIAL INCLUDING EXTRAS*					

That there are no other contracts for said work outstanding, and that there is nothing due or to become due to any person for material, labor or other work of any kind done or to be done upon or in connection with said work other than above stated.

DATE _____ SIGNATURE: _____

SUBSCRIBED AND SWORN TO BEFORE ME THIS _____ DAY OF _____, _____

*EXTRAS INCLUDE BUT ARE NOT LIMITED TO CHANGE ORDERS, BOTH ORAL AND WRITTEN, TO THE CONTRACT.

_____
NOTARY PUBLIC

AGENDA ITEM SUMMARY

BUFFALO GROVE VILLAGE BOARD

Regular Meeting: March 17, 2025

AGENDA ITEM 8.n. O-2025-44
Ordinance Authorizing a Contract with Corrective Asphalt Materials for the 2025 Pavement Rejuvenation Project

Contacts

Liaison: Trustee Stein
Staff: Briget Schwab

Staff Recommendation

Staff recommends approval.

Recommended Motion

I move to approve an Ordinance authorizing a Contract with Corrective Asphalt Materials for the 2025 Pavement Marking Maintenance Project.

Summary

Recommendation

Staff recommends that the Village Board authorize the Village Manager to purchase CRF Maltene Based Restorative Seal material and labor from Corrective Asphalt Materials, LLC (CAM) through the Municipal Partnering Initiative (MPI), in a not to exceed amount of $126,731.30 in accordance with the Illinois Governmental Joint Purchasing Act (30 ILCS 525/0.01 et seq.), pending review and approval of the contract by the Village Attorney. Due to the size and scope of the project, staff recommends a contingency fund be created and controlled by the Village in the amount of $11,488.30 (10.0% of the project cost). Public Works staff will consult with the Village Manager prior to exceeding the original scope of work cost of $114,833. This project is funded by the General Fund.

Background

In 2024, the Village of Winnetka led the three-year contract pavement rejuvenation bid for the Municipal Partnering Initiative (MPI). Bids were advertised and publicly opened by the Village of Winnetka on behalf of the MPI on February 28, 2024. CAM was the only qualifying bid received by the MPI. The applicable bid rate for CRF Maltene Based Restorative Seal in 2025 is $1.71 per square yard.

The CRF Maltene Based Restorative Seal is a corrective asphalt maintenance product designed to rejuvenate and restore aging pavement. It is particularly effective for roads that were resurfaced more than seven years ago. Due to budget constraints, the Village of Buffalo Grove

last used this product in 2016. Based on the positive results observed in 2016—where the product helped restore and extend the lifespan of treated pavement—staff recommends using it again. This low-cost maintenance method can help delay more expensive resurfacing work for eligible roads. This year's project focuses on streets in the High Point Subdivision, which were resurfaced as part of the 2013 Resurfacing Project. A total of 67,183 square yards of pavement are recommended for CRF treatment.

All work associated with this project is expected to be completed by November 30, 2025.

Strategic Alignment

Guiding Principle

Principle 3: Plan and Invest in the Future

Goal

Goal 1: Maintained effective village government: fiscally responsible and providing outstanding, responsive services

File Attachments

1. DRAFT Ordinance - 2025 Pavement Rejuvenation Project

smart. with heart.
50 Raupp Blvd, Buffalo Grove, IL 60089 847-459-2500 vbg.org

ORDINANCE 2025-xxx

AN ORDINANCE AUTHORIZING THE PURCHASE OF CRF MALTENE BASED RESTORATIVE SEAL MATERIAL AND LABOR FOR THE 2025 PAVEMENT REJUVENATION PROJECT

WHEREAS the Village of Buffalo Grove is a home rule unit pursuant to the Illinois Constitution of 1970; and

WHEREAS, the Village is a member of the Municipal Partnering Initiative and

WHEREAS the Village may make purchases in accordance with Illinois Governmental Joint Purchasing Act (30 ILCS 525/0.01 et seq.)

WHEREAS, the Municipal Partnering Initiative engaged in a competitive procurement process to obtain the best value for money.

NOW THEREFORE BE IT ORDAINED by the President and Board of Trustees of the Village of Buffalo Grove, Cook and Lake Counties, Illinois, as follows:

SECTION 1. The foregoing recitals are hereby adopted and incorporated and made a part of this Ordinance as if fully set forth herein.

SECTION 2. The Village Manager is authorized to purchase CRF Maltene Based Restorative Seal material and labor from Corrective Asphalt Materials, LLC (CAM) for the 2025 Pavement Rejuvenation Project at a price not to exceed $126,731.30 pending attorney review.

SECTION 3. If any section, paragraph, clause or provision of this Ordinance shall be held invalid, the invalidity thereof shall not affect any other provision of this Ordinance.

SECTION 4. This Ordinance shall be in full force and effect from and after its passage and approval and shall not be codified.

AYES: _____
NAYES: _____
ABSENT: _____
PASSED: _____, 2025
APPROVED: _____, 2025
PUBLISHED: _____, 2025

ATTEST:

_____
Janet M. Sirabian, Village Clerk

APPROVED:

_____
Eric N. Smith, Village President

DRAFT

smart. with heart.
50 Raupp Blvd, Buffalo Grove, IL 60089 847-459-2500 vbg.org

AGENDA ITEM SUMMARY

BUFFALO GROVE VILLAGE BOARD

Regular Meeting: March 17, 2025

AGENDA ITEM 9.a. O-2025-45

An Ordinance providing for the issuance of approximately $26,000,000 General Obligation Bonds, Series 2025, of the Village of Buffalo Grove, Lake and Cook Counties, Illinois, to finance capital improvements in and for the Village including, but not limited to, construction of new fire stations and street improvements, providing for the levy and collection of a direct annual tax sufficient to pay the principal and interest on said bonds, and authorizing the sale of said bonds to the purchaser thereof.

Contacts

Liaison: Trustee Bocek
Staff: Chris Black

Staff Recommendation

Staff recommends approval.

Recommended Motion

I move to approve Ordinance providing for the issuance of approximately $26,000,000 General Obligation Bonds, Series 2025, of the Village of Buffalo Grove, Lake and Cook Counties, Illinois, to finance capital improvements in and for the Village including, but not limited to, construction of new fire stations and street improvements, providing for the levy and collection of a direct annual tax sufficient to pay the principal and interest on said bonds, and authorizing the sale of said bonds to the purchaser thereof.

Summary

Please see the attached memorandum.

Strategic Alignment

Guiding Principle

Principle 1: Financially Responsible and Sound
Principle 3: Plan and Invest in the Future
Principle 7: Builds Our Community

Goal

Goal 1: Maintained effective village government: fiscally responsible and providing outstanding, responsive services
Goal 2: Enhanced, beautiful, safe and sustainable neighborhoods

smart. with heart.
50 Raupp Blvd, Buffalo Grove, IL 60089 847-459-2500 vbg.org

File Attachments

1. BOT Memo 03.17.25_2025 Bonds
2. Buffalo Grove - 2025 GO Bond Ordinance 4905-1934-4424 v2 (Board)

smart. with heart.
50 Raupp Blvd, Buffalo Grove, IL 60089 847-459-2500 vbg.org

MEMORANDUM

DATE: March 17, 2025

TO: Village Manager Dane Bragg

FROM: Chris Black, Finance Director

SUBJECT: 2025 Bond Issue

RECOMMENDATION

Staff recommend the Village Board approve the attached ordinance for the sale of approximately $26 million in bonds to finance the construction of Fire Station #25 and Fire Station #26 and to complete street improvements

BACKGROUND

Current

As of December 31, 2024, the total amount of outstanding debt is $57.9 million. Outstanding bond issues include the Series 2012 (road improvements – $4.3 million), Series 2016 (road improvements – $2.7 million), Series 2019 (refunding bonds – $0.3 million), Series 2020 (water/sewer and road improvements – $21.2 million) and Series 2022 (public works facility – $29.4 million).

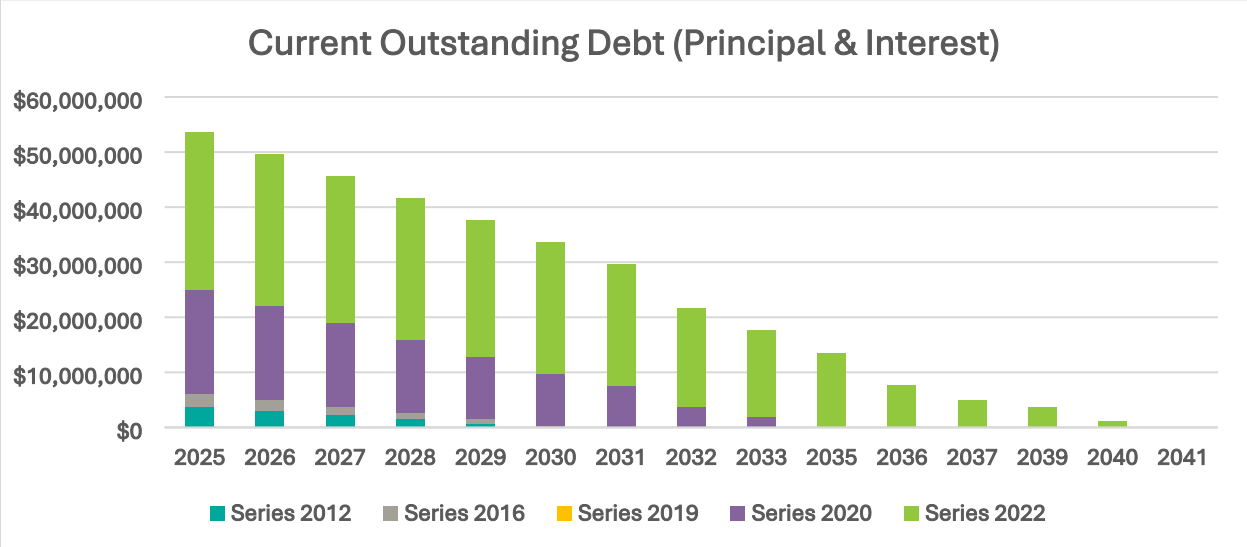

The outstanding debt is serviced by annual payments of principal and interest. As adopted by the Village Board, principal and interest payments have been structured to maintain level debt service over the of lifetime current obligations. The chart below shows the combined annual debt service

smart. with heart.
50 Raupp Boulevard, Buffalo Grove, IL 60089 847-459-2500 vbg.org

payments remaining by year.

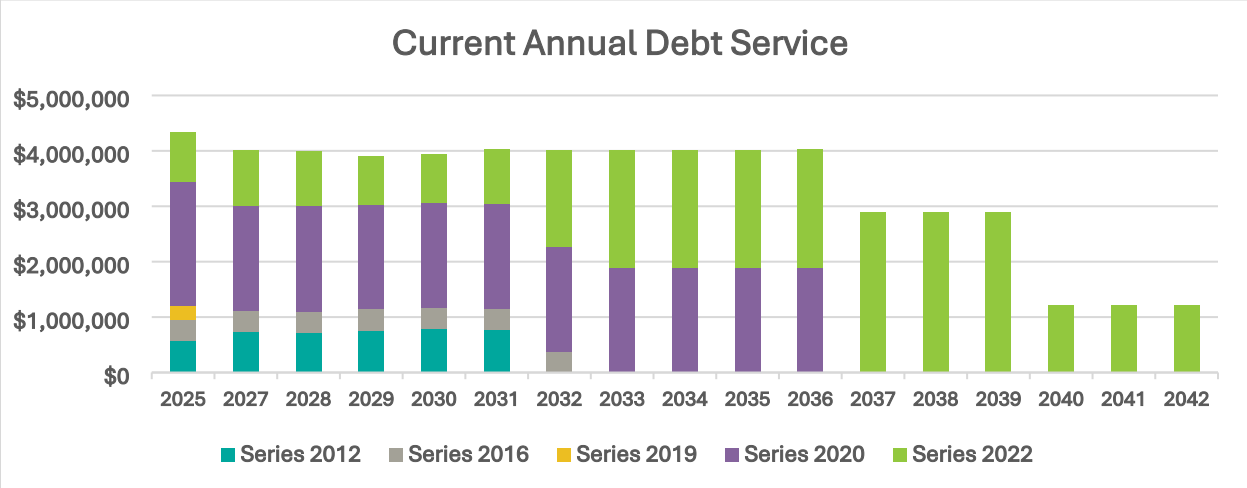

Proposed

Staff is proposing the issuance of approximately $26 million in bonds in 2025 (Series 2025) as part of the financing the construction of Fire Station #25 and Fire Station #26 and to complete street improvements. The total bond proceeds will be $25.4 million, $17.4 million will be used for the fire station projects and $8 million for street improvements.

The bonds will mature in 20 years, with the fire station portion amortized over 20 years and the street portion over a 15-year period. In anticipation of the bond issue, S&P Global assigned its "AAA" long-term rating to the Buffalo Grove Village, Ill's anticipated $26 million series 2025 general obligation (GO) bonds. The chart below shows our current total outstanding debt including the proposed $26 million bond issue.

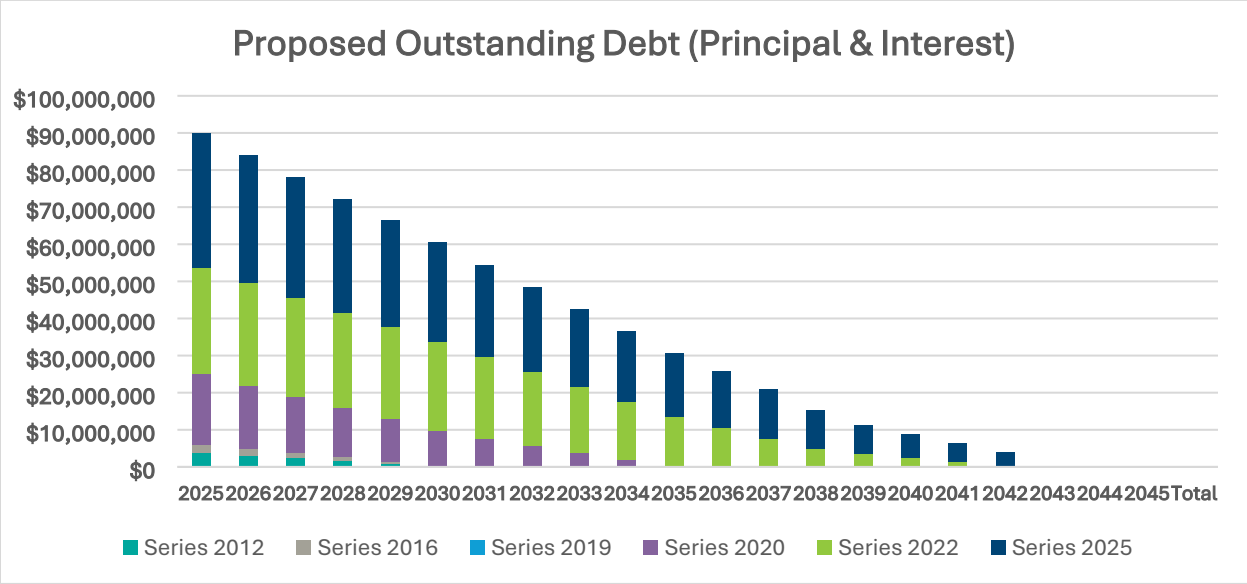

smart. with heart.
50 Raupp Boulevard, Buffalo Grove, IL 60089 847-459-2500 vbg.org

Using a level debt service strategy and including the new Series 2025 Bond with outstanding bonds issues results in annual debt services payments as shown in the chart below.

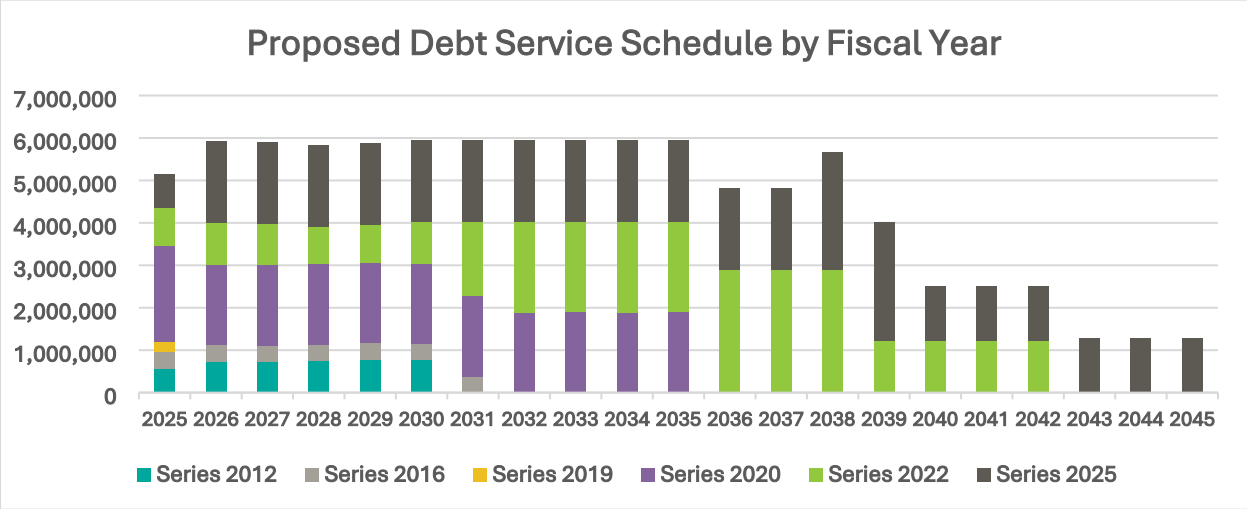

Principal and interest payments on the Series 2025 Bonds will commence in December 2025. The total bond proceeds will be $25.4 million, $17.4 million will be used for the fire station construction projects and $8 million for improvements. The Village has committed ambulance fee revenue to service the fire station construction portion of the debt. The street improvement portion will be serviced by general fund revenue and state and local motor fuel tax. When factoring in these abatements, the Series 2025 bonds will have no net impact on the tax levy.

smart. with heart.
50 Raupp Boulevard, Buffalo Grove, IL 60089 847-459-2500 vbg.org

ORDINANCE NUMBER O-2025-___

AN ORDINANCE providing for the issuance of approximately $26,000,000 General Obligation Bonds, Series 2025, of the Village of Buffalo Grove, Lake and Cook Counties, Illinois, to finance capital improvements in and for the Village including, but not limited to, construction of new fire stations and street improvements, providing for the levy and collection of a direct annual tax sufficient to pay the principal and interest on said bonds, and authorizing the sale of said bonds to the purchaser thereof.

WHEREAS, by virtue of a favorable vote of its electors and pursuant to the provisions of Section 6 of Article VII of the Constitution of the State of Illinois, the Village of Buffalo Grove, Lake and Cook Counties, Illinois (the *"Village"*), is a home rule unit and may exercise any power or perform any function pertaining to its government and affairs including, but not limited to, the power to tax and to incur debt; and

WHEREAS, pursuant to the provisions of said Section 6, the Village has the power to incur debt payable from ad valorem property tax receipts or from any other lawful source and maturing within 40 years from the time it is incurred without prior referendum approval; and

WHEREAS, the President and Board of Trustees of the Village (the *"Board"*) has considered the needs of the Village and has determined and does hereby determine that it is necessary, desirable and in the best interests of the Village to borrow $_____ to finance capital improvements in and for the Village including, but not limited to, construction of new fire stations and street improvements (collectively, the *"Project"*); and

WHEREAS, it is in the best interest of the Village to issue bonds of the Village in an aggregate principal amount of $_____ to evidence said borrowing and for the purpose of paying costs of the Project:

NOW THEREFORE Be It Ordained by the President and Board of Trustees of the Village of Buffalo Grove, Lake and Cook Counties, Illinois, in the exercise of its home rule powers, as follows:

Section 1. Incorporation of Preambles. The Board hereby finds that all of the recitals contained in the preambles to this Ordinance are true, correct and complete and does incorporate them into this Ordinance by this reference.

Section 2. Authorization. It is hereby found and determined that pursuant to the provisions of the Illinois Municipal Code, as supplemented and amended, and the home rule powers of the Village under Section 6 of Article VII of the Illinois Constitution of 1970 (in the event of conflict between the provisions of said code and home rule powers, the home rule powers shall be deemed to supersede the provisions of said code) (collectively, the *"Act"*), the Board has been authorized by law to borrow $_____ upon the credit of the Village and as evidence of such indebtedness to issue bonds of the Village to said amount, the proceeds of said bonds to be used for the Project, that it is necessary to borrow $_____ of said authorized sum and issue bonds in evidence thereof, that such borrowing of money is necessary for the welfare of the government and affairs of the Village, is for a proper public purpose or purposes and is in the public interest, and is authorized pursuant to the Act, and these findings and determinations, together with those set forth in the preambles to this Ordinance, shall be deemed conclusive.

Section 3. Bond Details. There be borrowed on the credit of and for and on behalf of the Village the sum of $_____ for the purpose aforesaid; and that bonds of the Village (the *"Bonds"*) shall be issued in said amount and shall be designated "General Obligation Bonds, Series 2025." The Bonds shall be dated the date of issuance thereof, and shall also bear the date of authentication, shall be in fully registered form, shall be in denominations of $5,000 each and authorized integral multiples thereof (but no single Bond shall represent installments of principal maturing on more than one date), shall be numbered 1 and upward, and the Bonds shall become due and payable serially (subject to redemption prior to maturity as

hereinafter provided) on December 30 of each of the years, in the amounts and bearing interest per annum as follows:

YEAR OF MATURITY	PRINCIPAL AMOUNT	RATE OF INTEREST
2026		
2027		
2028		
2029		
2030		
2031		
2032		
2033		
2034		
2035		
2036		
2037		
2038		
2039		
2040		
2041		
2042		
2043		
2044		
2045		

The Bonds shall bear interest from their date or from the most recent interest payment date to which interest has been paid or duly provided for, until the principal amount of the Bonds is paid, such interest (computed upon the basis of a 360-day year of twelve 30-day months) being payable on June 30 and December 30 of each year, commencing on December 30, 2025. Interest on each Bond shall be paid by check or draft of Amalgamated Bank of Chicago, Chicago, Illinois, as bond registrar and paying agent (the *"Bond Registrar"*), payable upon presentation thereof in lawful money of the United States of America, to the person in whose name such Bond is registered at the close of business on the 15th day of the month of any interest payment date. The principal of the Bonds shall be payable in lawful money of the United States of America upon presentation thereof at the designated corporate trust office of the Bond Registrar.

Section 4. Execution; Authentication. The Bonds shall be executed on behalf of the Village by the manual or facsimile signature of its President and attested by the manual or facsimile signature of its Village Clerk, as they shall determine, and shall have impressed or imprinted thereon the corporate seal or facsimile thereof of the Village. In case any such officer whose signature shall appear on any Bond shall cease to be such officer before the delivery of such Bond, such signature shall nevertheless be valid and sufficient for all purposes, the same as if such officer had remained in office until delivery. All Bonds shall have thereon a certificate of authentication, substantially in the form hereinafter set forth, duly executed by the Bond Registrar as authenticating agent of the Village and showing the date of authentication. No Bond shall be valid or obligatory for any purpose or be entitled to any security or benefit under this Ordinance unless and until such certificate of authentication shall have been duly executed by the Bond Registrar by manual signature, and such certificate of authentication upon any such Bond shall be conclusive evidence that such Bond has been authenticated and delivered under this Ordinance.

Section 5. Registration of Bonds; Persons Treated as Owners. (a) *General*. The Village shall cause books (the *"Bond Register"*) for the registration and for the transfer of the Bonds as provided in this Ordinance to be kept at the designated corporate trust office of the Bond Registrar, which is hereby constituted and appointed the registrar of the Village for the Bonds. The Village is authorized to prepare, and the Bond Registrar shall keep custody of, multiple Bond blanks executed by the Village for use in the transfer and exchange of Bonds.

Upon surrender for transfer of any Bond at the designated corporate trust office of the Bond Registrar, duly endorsed by, or accompanied by a written instrument or instruments of transfer in form satisfactory to the Bond Registrar and duly executed by, the registered owner or his or her attorney duly authorized in writing, the Village shall execute and the Bond Registrar shall authenticate, date and deliver in the name of the transferee or transferees a new fully

registered Bond or Bonds of the same maturity of authorized denominations, for a like aggregate principal amount. Any fully registered Bond or Bonds may be exchanged at said office of the Bond Registrar for a like aggregate principal amount of Bond or Bonds of the same maturity of other authorized denominations. The execution by the Village of any fully registered Bond shall constitute full and due authorization of such Bond and the Bond Registrar shall thereby be authorized to authenticate, date and deliver such Bond, *provided, however,* the principal amount of outstanding Bonds of each maturity authenticated by the Bond Registrar shall not exceed the authorized principal amount of Bonds for such maturity less previous retirements.

The Bond Registrar shall not be required to transfer or exchange any Bond during the period beginning at the close of business on the 15th day of the month of any interest payment date on such Bond and ending at the opening of business on such interest payment date, nor to transfer or exchange any Bond after notice calling such Bond for redemption has been mailed, nor during a period of fifteen (15) days next preceding mailing of a notice of redemption of any Bonds.

The person in whose name any Bond shall be registered shall be deemed and regarded as the absolute owner thereof for all purposes, and payment of the principal of or interest on any Bond shall be made only to or upon the order of the registered owner thereof or his or her legal representative. All such payments shall be valid and effectual to satisfy and discharge the liability upon such Bond to the extent of the sum or sums so paid.

No service charge shall be made for any transfer or exchange of Bonds, but the Village or the Bond Registrar may require payment of a sum sufficient to cover any tax or other governmental charge that may be imposed in connection with any transfer or exchange of Bonds, except in the case of the issuance of a Bond or Bonds for the unredeemed portion of a Bond surrendered for redemption.

(b) *Global Book-Entry System.* The Bonds shall be initially issued in the form of a separate single fully registered Bond for each of the maturities of the Bonds determined as described in Section 3 hereof. Upon initial issuance, the ownership of each such Bond shall be registered in the Bond Register in the name of Cede & Co., or any successor thereto (*"Cede"*), as nominee of The Depository Trust Company, New York, New York, and its successors and assigns (*"DTC"*). All of the outstanding Bonds shall be registered in the Bond Register in the name of Cede, as nominee of DTC, except as hereinafter provided. Any officer of the Village who is a signatory on the Bonds is authorized to execute and deliver, on behalf of the Village, such letters to or agreements with DTC as shall be necessary to effectuate such book-entry system (any such letter or agreement being referred to herein as the *"Representation Letter"*), which Representation Letter may provide for the payment of principal of or interest on the Bonds by wire transfer.

With respect to Bonds registered in the Bond Register in the name of Cede, as nominee of DTC, the Village and the Bond Registrar shall have no responsibility or obligation to any broker-dealer, bank or other financial institution for which DTC holds Bonds from time to time as securities depository (each such broker-dealer, bank or other financial institution being referred to herein as a *"DTC Participant"*) or to any person on behalf of whom such a DTC Participant holds an interest in the Bonds. Without limiting the immediately preceding sentence, the Village and the Bond Registrar shall have no responsibility or obligation with respect to (i) the accuracy of the records of DTC, Cede or any DTC Participant with respect to any ownership interest in the Bonds, (ii) the delivery to any DTC Participant or any other person, other than a registered owner of a Bond as shown in the Bond Register, of any notice with respect to the Bonds, including any notice of redemption, or (iii) the payment to any DTC Participant or any other person, other than a registered owner of a Bond as shown in the Bond Register, of any amount with respect to the principal of or interest on the Bonds. The Village

and the Bond Registrar may treat and consider the person in whose name each Bond is registered in the Bond Register as the holder and absolute owner of such Bond for the purpose of payment of principal and interest with respect to such Bond, for the purpose of giving notices of redemption and other matters with respect to such Bond, for the purpose of registering transfers with respect to such Bond, and for all other purposes whatsoever. The Bond Registrar shall pay all principal of and interest on the Bonds only to or upon the order of the respective registered owners of the Bonds, as shown in the Bond Register, or their respective attorneys duly authorized in writing, and all such payments shall be valid and effective to fully satisfy and discharge the Village's obligations with respect to payment of the principal of and interest on the Bonds to the extent of the sum or sums so paid. No person other than a registered owner of a Bond as shown in the Bond Register, shall receive a Bond evidencing the obligation of the Village to make payments of principal and interest with respect to any Bond. Upon delivery by DTC to the Bond Registrar of written notice to the effect that DTC has determined to substitute a new nominee in place of Cede, and subject to the provisions in Section 3 hereof with respect to the payment of interest to the registered owners of Bonds at the close of business on the 15th day of the month next preceding the applicable interest payment date, the name "Cede" in this Ordinance shall refer to such new nominee of DTC.

In the event that (i) the Village determines that DTC is incapable of discharging its responsibilities described herein and in the Representation Letter, (ii) the agreement among the Village, the Bond Registrar and DTC evidenced by the Representation Letter shall be terminated for any reason or (iii) the Village determines that it is in the best interests of the beneficial owners of the Bonds that they be able to obtain certificated Bonds, the Village shall notify DTC and DTC Participants of the availability through DTC of certificated Bonds and the Bonds shall no longer be restricted to being registered in the Bond Register in the name of Cede, as nominee of DTC. At that time, the Village may determine that the Bonds shall be registered in the name

of and deposited with such other depository operating a universal book-entry system, as may be acceptable to the Village, or such depository's agent or designee, and if the Village does not select such alternate universal book-entry system, then the Bonds may be registered in whatever name or names registered owners of Bonds transferring or exchanging Bonds shall designate, in accordance with the provisions of Section 5(a) hereof.

Notwithstanding any other provisions of this Ordinance to the contrary, so long as any Bond is registered in the name of Cede, as nominee of DTC, all payments with respect to principal of and interest on such Bond and all notices with respect to such Bond shall be made and given, respectively, in the name provided in the Representation Letter.

Section 6. Redemption. (a) *Optional Redemption*. The Bonds due on and after December 30, 2035, are subject to redemption prior to maturity at the option of the Village as a whole, or in part in any order of maturity determined by the Village (less than all of the Bonds of a single maturity to be selected by the Bond Registrar), on December 30, 2034, or on any date thereafter, at the redemption price of par plus accrued interest to the date of redemption.

(b) *General.* The Bonds shall be redeemed only in the principal amount of $5,000 and integral multiples thereof. The Village shall, at least forty-five (45) days prior to any optional redemption date (unless a shorter time period shall be satisfactory to the Bond Registrar) notify the Bond Registrar of such redemption date and of the principal amount, and maturity or maturities of Bonds to be redeemed. For purposes of any redemption of less than all of the outstanding Bonds of a single maturity, the particular Bonds or portions of Bonds to be redeemed shall be selected by lot by the Bond Registrar from the Bonds of such maturity by such method of lottery as the Bond Registrar shall deem fair and appropriate; *provided* that such lottery shall provide for the selection for redemption of Bonds or portions thereof so that any $5,000 Bond or $5,000 portion of a Bond shall be as likely to be called for redemption as any other such $5,000 Bond or $5,000 portion. The Bond Registrar shall make such selection upon the earlier of the

irrevocable deposit of funds with an escrow agent sufficient to pay the redemption price of the Bonds to be redeemed or the time of the giving of official notice of redemption.

The Bond Registrar shall promptly notify the Village in writing of the Bonds or portions of Bonds selected for redemption and, in the case of any Bond selected for partial redemption, the principal amount thereof to be redeemed.

Section 7. Redemption Procedure. Unless waived by any holder of Bonds to be redeemed, notice of the call for any such redemption shall be given by the Bond Registrar on behalf of the Village by mailing the redemption notice by first class mail at least thirty (30) days and not more than sixty (60) days prior to the date fixed for redemption to the registered owner of the Bond or Bonds to be redeemed at the address shown on the Bond Register or at such other address as is furnished in writing by such registered owner to the Bond Registrar.

All notices of redemption shall state:

(1) the redemption date,

(2) the redemption price,

(3) if less than all outstanding Bonds are to be redeemed, the identification (and, in the case of partial redemption, the respective principal amounts) of the Bonds to be redeemed,

(4) that on the redemption date the redemption price will become due and payable upon each such Bond or portion thereof called for redemption, and that interest thereon shall cease to accrue from and after said date,

(5) the place where such Bonds are to be surrendered for payment of the redemption price, which place of payment shall be the designated corporate trust office of the Bond Registrar, and

(6) such other information then required by custom, practice or industry standard.

Unless moneys sufficient to pay the redemption price of the Bonds to be redeemed at the option of the Village shall have been received by the Bond Registrar prior to the giving of such notice of redemption, such notice may, at the option of the Village, state that said redemption

shall be conditional upon the receipt of such moneys by the Bond Registrar on or prior to the date fixed for redemption. If such moneys are not received, such notice shall be of no force and effect, the Village shall not redeem such Bonds, and the Bond Registrar shall give notice, in the same manner in which the notice of redemption shall have been given, that such moneys were not so received and that such Bonds will not be redeemed. Otherwise, prior to any redemption date, the Village shall deposit with the Bond Registrar an amount of money sufficient to pay the redemption price of all the Bonds or portions of Bonds which are to be redeemed on that date.

Subject to the provisions for a conditional redemption described above, notice of redemption having been given as aforesaid, the Bonds or portions of Bonds so to be redeemed shall, on the redemption date, become due and payable at the redemption price therein specified, and from and after such date (unless the Village shall default in the payment of the redemption price) such Bonds or portions of Bonds shall cease to bear interest. Upon surrender of such Bonds for redemption in accordance with said notice, such Bonds shall be paid by the Bond Registrar at the redemption price. Installments of interest due on or prior to the redemption date shall be payable as herein provided for payment of interest. Upon surrender for any partial redemption of any Bond, there shall be prepared for the registered holder a new Bond or Bonds of the same maturity in the amount of the unpaid principal.

If any Bond or portion of Bond called for redemption shall not be so paid upon surrender thereof for redemption, the principal shall, until paid, bear interest from the redemption date at the rate borne by the Bond or portion of Bond so called for redemption. All Bonds which have been redeemed shall be cancelled and destroyed by the Bond Registrar and shall not be reissued.

Section 8. Form of Bond. The Bonds shall be in substantially the following form; *provided, however,* that if the text of the Bond is to be printed in its entirety on the front side of the Bond, then paragraph [2] and the legend, "See Reverse Side for Additional Provisions", shall be omitted and paragraph [6] and the paragraphs thereafter as shall be appropriate shall be inserted immediately after paragraph [1]:

[Form of Bond - Front Side]

REGISTERED
NO. _____

REGISTERED
$_____

UNITED STATES OF AMERICA

STATE OF ILLINOIS

COUNTIES OF LAKE AND COOK

VILLAGE OF BUFFALO GROVE

GENERAL OBLIGATION BOND, SERIES 2025

See Reverse Side for Additional Provisions.

Interest Rate: ___%	Maturity Date: December 30, 20__	Dated Date: _____	CUSIP: 119535 __

Registered Owner: CEDE & CO.

Principal Amount:

[1] KNOW ALL PERSONS BY THESE PRESENTS that the Village of Buffalo Grove, Lake and Cook Counties, Illinois, a municipality, home rule unit, and political subdivision of the State of Illinois (the *"Village"*), hereby acknowledges itself to owe and for value received promises to pay to the Registered Owner identified above, or registered assigns as hereinafter provided, on the Maturity Date identified above, the Principal Amount identified above and to pay interest (computed on the basis of a 360-day year of twelve 30-day months) on such Principal Amount from the later of the Dated Date of this Bond identified above or from the most recent interest payment date to which interest has been paid or duly provided for, at the Interest Rate per annum identified above, such interest to be payable on June 30 and December 30 of each year, commencing December 30, 2025, until said Principal Amount is paid or duly provided for. The principal of this Bond is payable in lawful money of the United States of America upon presentation hereof at the designated corporate trust office of Amalgamated Bank of Chicago, Chicago, Illinois, as bond registrar and paying agent (the *"Bond Registrar"*). Payment of

interest shall be made to the Registered Owner hereof as shown on the registration books of the Village maintained by the Bond Registrar, at the close of business on the 15th day of the month of the interest payment date. Interest shall be paid by check or draft of the Bond Registrar, payable upon presentation in lawful money of the United States of America, mailed to the address of such Registered Owner as it appears on such registration books, or at such other address furnished in writing by such Registered Owner to the Bond Registrar. For the prompt payment of this Bond both principal and interest at maturity, the full faith, credit and resources of the Village are hereby irrevocably pledged.

[2] Reference is hereby made to the further provisions of this Bond set forth on the reverse hereof, and such further provisions shall for all purposes have the same effect as if set forth at this place.

[3] It is hereby certified and recited that all conditions, acts and things required by the Constitution and Laws of the State of Illinois to exist or to be done precedent to and in the issuance of this Bond, including the hereinafter defined Act, have existed and have been properly done, happened and been performed in regular and due form and time as required by law; that the indebtedness of the Village, represented by the Bonds, and including all other indebtedness of the Village, howsoever evidenced or incurred, does not exceed any constitutional or statutory or other lawful limitation; and that provision has been made for the collection of a direct annual tax, in addition to all other taxes, on all of the taxable property in the Village sufficient to pay the interest hereon as the same falls due and also to pay and discharge the principal hereof at maturity.

[4] This Bond shall not be valid or become obligatory for any purpose until the certificate of authentication hereon shall have been signed by the Bond Registrar.

IN WITNESS WHEREOF the Village of Buffalo Grove, Lake and Cook Counties, Illinois, by its President and Board of Trustees, has caused this Bond to be executed by the manual or duly authorized facsimile signature of its President and attested by the manual or duly authorized facsimile signature of its Village Clerk and its corporate seal or a facsimile thereof to be impressed or reproduced hereon, all as appearing hereon and as of the Dated Date identified above.

SPECIMEN
President, Village of Buffalo Grove
Lake and Cook Counties, Illinois

ATTEST:

SPECIMEN
Village Clerk, Village of Buffalo Grove
Lake and Cook Counties, Illinois

[SEAL]

Date of Authentication: _____, 2025

CERTIFICATE
OF
AUTHENTICATION

This Bond is one of the Bonds described in the within-mentioned Ordinance and is one of the General Obligation Bonds, Series 2025, of the Village of Buffalo Grove, Lake and Cook Counties, Illinois.

AMALGAMATED BANK OF CHICAGO
as Bond Registrar

By SPECIMEN
Authorized Officer

Bond Registrar and Paying Agent:
Amalgamated Bank of Chicago,
Chicago, Illinois

[FORM OF BOND - REVERSE SIDE]

VILLAGE OF BUFFALO GROVE

LAKE AND COOK COUNTIES, ILLINOIS

GENERAL OBLIGATION BOND, SERIES 2025

[6] This Bond is one of a series of bonds (the *"Bonds"*) issued by the Village to finance capital improvements in and for the Village including, but not limited to, construction of new fire stations and street improvements and pay expenses incidental thereto, all as described in the Ordinance of the Village, adopted by the President and Board of Trustees of the Village on the 17th day of March, 2025, authorizing the Bonds (the *"Ordinance"*), pursuant to and in all respects in compliance with the applicable provisions of the Illinois Municipal Code, as amended; as further supplemented and, where necessary, superseded, by the powers of the Village as a home rule unit under the provisions of Section 6 of Article VII of the Illinois Constitution of 1970; and as further supplemented by the Local Government Debt Reform Act of the State of Illinois, as amended (collectively, such Illinois Municipal Code, constitutional home rule powers, and said Local Government Debt Reform Act being the *"Act"*), and with the Ordinance, which has been duly adopted by the President and Board of Trustees of the Village and approved by the President, in all respects as by law required.

[7] Bonds of the issue of which this Bond is one maturing on and after December 30, 2035, are subject to redemption prior to maturity at the option of the Village as a whole, or in part in integral multiples of $5,000 in any order of their maturity as determined by the Village (less than all the Bonds of a single maturity to be selected by lot by the Bond Registrar), on December 30, 2034, and on any date thereafter, at the redemption price of par plus accrued interest to the redemption date.

[8] Notice of any such redemption shall be sent by first class mail not less than thirty (30) days nor more than sixty (60) days prior to the date fixed for redemption to the registered

owner of each Bond to be redeemed at the address shown on the registration books of the Village maintained by the Bond Registrar or at such other address as is furnished in writing by such registered owner to the Bond Registrar. When so called for redemption, this Bond will cease to bear interest on the specified redemption date, provided funds for redemption are on deposit at the place of payment at that time, and shall not be deemed to be outstanding.

[9] This Bond is transferable by the Registered Owner hereof in person or by his or her attorney duly authorized in writing at the designated corporate trust office of the Bond Registrar in Chicago, Illinois, but only in the manner, subject to the limitations and upon payment of the charges provided in the Ordinance, and upon surrender and cancellation of this Bond. Upon such transfer a new Bond or Bonds of authorized denominations of the same maturity and for the same aggregate principal amount will be issued to the transferee in exchange therefor.

[10] The Bonds are issued in fully registered form in the denomination of $5,000 each or authorized integral multiples thereof. This Bond may be exchanged at the designated corporate trust office of the Bond Registrar for a like aggregate principal amount of Bonds of the same maturity of other authorized denominations, upon the terms set forth in the Ordinance. The Bond Registrar shall not be required to transfer or exchange any Bond during the period beginning at the close of business on the 15th day of the month of any interest payment date on such Bond and ending at the opening of business on such interest payment date, nor to transfer or exchange any Bond after notice calling such Bond for redemption has been mailed, nor during a period of fifteen (15) days next preceding mailing of a notice of redemption of any Bonds.

[11] The Village and the Bond Registrar may deem and treat the Registered Owner hereof as the absolute owner hereof for the purpose of receiving payment of or on account of principal hereof and interest due hereon and for all other purposes, and neither the Village nor the Bond Registrar shall be affected by any notice to the contrary.

ASSIGNMENT

FOR VALUE RECEIVED, the undersigned sells, assign, and transfers unto _____

	Here insert Social Security Number, Employer Identification Number or other Identifying Number

_____

_____

(Name and Address of Assignee)

the within Bond and does hereby irrevocably constitute and appoint _____

_____

as attorney to transfer the said Bond on the books kept for registration thereof with full power of substitution in the premises.

Dated: _____ _____

Signature guaranteed: _____

NOTICE: The signature to this transfer and assignment must correspond with the name of the Registered Owner as it appears upon the face of the within Bond in every particular, without alteration or enlargement or any change whatever.

Section 9. Sale of Bonds. The Bonds hereby authorized shall be executed as in this Ordinance provided as soon after the passage hereof as may be, and thereupon be deposited with the Treasurer of the Village (the *"Treasurer"*), and be by the Treasurer delivered to _____, the same being the best bidder at public sale of the Bonds (the *"Purchaser"*), upon receipt of the purchase price therefor, the same being _____; the contract for the sale of the Bonds heretofore entered into (the *"Purchase Contract"*), as evidenced by an Official Notice of Sale and executed Official Bid Form, dated this date, is in all respects ratified, approved and confirmed, it being hereby found and determined that the Bonds have been sold at such price and bear interest at such rates that neither the true interest cost

(yield) nor the net interest rate received upon such sale exceed the maximum rate otherwise authorized by Illinois law and that the Purchase Contract is in the best interests of the Village and that no person holding any office of the Village, either by election or appointment, is in any manner financially interested directly in his or her own name or indirectly in the name of any other person, association, trust or corporation, in the sale of the Bonds to the Purchaser.

The use of any Preliminary Official Statement and any final Official Statement relating to the Bonds (the *"Official Statement"*) is hereby ratified, approved and authorized; the execution and delivery of the Official Statement is hereby authorized; and the officers of the Board are hereby authorized to take any action as may be required on the part of the Village to consummate the transactions contemplated by the Purchase Contract, this Ordinance, said Preliminary Official Statement, the Official Statement and the Bonds.

Section 10. Tax Levy; Abatement. In order to provide for the collection of a direct annual tax to pay the interest on the Bonds as it falls due, and also to pay and discharge the principal thereof at maturity, there be and there is hereby levied upon all the taxable property within the Village a direct annual tax for each of the years while the Bonds or any of them are outstanding, a direct annual tax sufficient for that purpose, and that there be and there is hereby levied upon all of the taxable property in the Village, the following direct annual tax, to-wit (the *"Pledged Taxes"*):

FOR THE YEAR	A TAX SUFFICIENT TO PRODUCE THE SUM OF:
2025	$ for interest up to and including December 30, 2026
2026	$ for interest and principal
2027	$ for interest and principal
2028	$ for interest and principal
2029	$ for interest and principal
2030	$ for interest and principal
2031	$ for interest and principal
2032	$ for interest and principal
2033	$ for interest and principal
2034	$ for interest and principal
2035	$ for interest and principal
2036	$ for interest and principal
2037	$ for interest and principal
2038	$ for interest and principal
2039	$ for interest and principal
2040	$ for interest and principal
2041	$ for interest and principal
2042	$ for interest and principal
2043	$ for interest and principal
2044	$ for interest and principal

Principal or interest maturing at any time when there are insufficient funds on hand from the Pledged Taxes to pay the same shall be paid from the general funds of the Village, and the fund from which such payment was made shall be reimbursed out of the Pledged Taxes when the same shall be collected.

The Village covenants and agrees with the purchasers and the holders of the Bonds that so long as any of the Bonds remain outstanding, the Village will take no action or fail to take any action which in any way would adversely affect the ability of the Village to levy and collect the Pledged Taxes and the Village and its officers will comply with all present and future applicable laws in order to assure that the Pledged Taxes will be levied, extended and collected as provided herein and deposited in the Bond Fund (as hereinafter defined).

Whenever other funds from any other lawful source are made available for the purpose of paying any principal of or interest on the Bonds so as to enable the abatement of the Pledged

Taxes, the Board shall, by proper proceedings, direct the transfer of such funds to the Bond Fund, and shall then further direct the abatement of the taxes by the amount so deposited. The Village covenants and agrees that it will not direct the abatement of taxes until money has been deposited into the Bond Fund in the amount of such abatement. A certified copy or other notification of any such proceedings abating taxes may then be filed with the County Clerks of The Counties of Lake and Cook, Illinois (the "*County Clerks*"), in a timely manner to effect such abatement.

Section 11. Filing of Ordinance. Forthwith upon the passage of this Ordinance, the Village Clerk of the Village is hereby directed to file a certified copy of this Ordinance with the County Clerks; and the County Clerks shall in and for each of the years 2025 to 2045, inclusive, ascertain the rate necessary to produce the tax herein levied; and the County Clerks shall extend the same for collection on the tax books in connection with other taxes levied in said years in and by the Village for general corporate purposes of the Village; and, subject to abatement as stated hereinabove, in said years such annual tax shall be levied and collected by and for and on behalf of the Village in like manner as taxes for general corporate purposes for said years are levied and collected, and in addition to and in excess of all other taxes, and when collected, the taxes hereby levied shall be placed to the credit of a special fund to be designated "Bond and Interest Fund Account of 2025" (the *"Bond Fund"*), which taxes are hereby irrevocably pledged to and shall be used only for the purpose of paying the principal of and interest on the Bonds.

Section 12. Use of Bond Proceeds. Accrued interest received on the delivery of the Bonds, if any, is hereby appropriated for the purpose of paying first interest due on the Bonds and is hereby ordered deposited into the Bond Fund. The principal proceeds of the Bonds and any premium received from the sale of the Bonds are hereby appropriated to pay the costs of issuance of the Bonds and for the purpose of paying the cost of the Project, and that portion thereof not needed to pay such costs of issuance is hereby ordered deposited into the Capital

Improvement Account of the Village. Alternatively, the Treasurer may allocate such proceeds to one or more related project funds of the Village already in existence; *provided, however*, that this shall not relieve the Treasurer of the duty to account for the proceeds as herein provided. Any such one or more funds shall also be referred to hereinafter, collectively as the "*Project Fund.*" At the time of the issuance of the Bonds, the costs of issuance of the Bonds may be paid by the Purchaser on behalf of the Village from the proceeds of the Bonds.

Section 13. Non-Arbitrage and Tax-Exemption. The Village hereby covenants that it will not take any action, omit to take any action or permit the taking or omission of any action within its control (including, without limitation, making or permitting any use of the proceeds of the Bonds) if taking, permitting or omitting to take such action would cause any of the Bonds to be an arbitrage bond or a private activity bond within the meaning of the Internal Revenue Code of 1986, as amended (the *"Code"*), or would otherwise cause the interest on the Bonds to be included in the gross income of the recipients thereof for federal income tax purposes. The Village acknowledges that, in the event of an examination by the Internal Revenue Service (the *"IRS"*) of the exemption from Federal income taxation for interest paid on the Bonds, under present rules, the Village may be treated as a "taxpayer" in such examination and agrees that it will respond in a commercially reasonable manner to any inquiries from the IRS in connection with such an examination.

The Village also agrees and covenants with the purchasers and holders of the Bonds from time to time outstanding that, to the extent possible under Illinois law, it will comply with whatever federal tax law is adopted in the future which applies to the Bonds and affects the tax-exempt status of the Bonds.

The Board hereby authorizes the officials of the Village responsible for issuing the Bonds, the same being the President and Village Clerk, to make such further covenants and certifications regarding the specific use of the proceeds of the Bonds as approved by the Board

and as may be necessary to assure that the use thereof will not cause the Bonds to be arbitrage bonds and to assure that the interest on the Bonds will be exempt from federal income taxation. In connection therewith, the Village and the Board further agree: (a) through their officers, to make such further specific covenants, representations as shall be truthful, and assurances as may be necessary or advisable; (b) to consult with counsel approving the Bonds and to comply with such advice as may be given; (c) to pay to the United States, as necessary, such sums of money representing required rebates of excess arbitrage profits relating to the Bonds; (d) to file such forms, statements, and supporting documents as may be required and in a timely manner; and (e) if deemed necessary or advisable by their officers, to employ and pay fiscal agents, financial advisors, attorneys, and other persons to assist the Village in such compliance.

Section 14. List of Bondholders. The Bond Registrar shall maintain a list of the names and addresses of the holders of all Bonds and upon any transfer shall add the name and address of the new Bondholder and eliminate the name and address of the transferor Bondholder.

Section 15. Duties of Bond Registrar. If requested by the Bond Registrar, the President and Village Clerk of the Village are authorized to execute the Bond Registrar's standard form of agreement between the Village and the Bond Registrar with respect to the obligations and duties of the Bond Registrar hereunder which may include the following:

(a) to act as bond registrar, authenticating agent, paying agent and transfer agent as provided herein;

(b) to maintain a list of Bondholders as set forth herein and to furnish such list to the Village upon request, but otherwise to keep such list confidential;

(c) to give notice of redemption of the Bonds as provided herein;

(d) to cancel and/or destroy Bonds which have been paid at maturity or submitted for exchange or transfer;

(e) to furnish the Village at least annually a certificate with respect to Bonds cancelled and/or destroyed; and

(f) to furnish the Village at least annually an audit confirmation of Bonds paid, Bonds outstanding and payments made with respect to interest on the Bonds.

Section 16. Continuing Disclosure Undertaking. The President or Treasurer of the Village is hereby authorized, empowered and directed to execute and deliver a Continuing Disclosure Undertaking (the *"Continuing Disclosure Undertaking"*) in connection with the issuance of the Bonds, with such provisions therein as he or she shall approve, his or her execution thereof to constitute conclusive evidence of his or her approval of such provisions. When the Continuing Disclosure Undertaking is executed and delivered on behalf of the Village as herein provided, the Continuing Disclosure Undertaking will be binding on the Village and the officers, employees and agents of the Village, and the officers, employees and agents of the Village are hereby authorized, empowered and directed to do all such acts and things and to execute all such documents as may be necessary to carry out and comply with the provisions of the Continuing Disclosure Undertaking as executed. Notwithstanding any other provision of this Ordinance, the sole remedies for failure to comply with the Continuing Disclosure Undertaking shall be the ability of the beneficial owner of any Bond to seek mandamus or specific performance by court order, to cause the Village to comply with its obligations under the Continuing Disclosure Undertaking.

Section 17. Record-Keeping Policy and Post-Issuance Compliance Matters. On April 19, 2010, the Board adopted a record-keeping policy (the *"Policy"*) in order to maintain sufficient records to demonstrate compliance with its covenants and expectations to ensure the appropriate federal tax status for the debt obligations of the Village, the interest on which is excludable from "gross income" for federal income tax purposes or which enable the Village or the holder to receive federal tax benefits, including, but not limited to, qualified tax credit bonds and other specified tax credit bonds. The Board and the Village hereby reaffirm the Policy.

Section 18. Superseder and Effective Date. All ordinances, resolutions, and orders, or parts thereof, in conflict herewith, are to the extent of such conflict hereby superseded; and this Ordinance shall be in full force and effect immediately upon its passage and approval.

Trustee _____ moved to approve the ordinance. Trustee _____ seconded the motion. The motion passed on the following roll call vote:

AYES: _____

NAYS: _____

ABSENT: _____

ADOPTED: March 17, 2025

APPROVED: March 17, 2025

_____
President, Village of Buffalo Grove
Lake and Cook Counties, Illinois

Recorded in the Village Records: March 17, 2025.

ATTEST:

_____
Village Clerk, Village of Buffalo Grove
Lake and Cook Counties, Illinois

STATE OF ILLINOIS)
) SS
COUNTY OF LAKE)

CERTIFICATION OF ORDINANCE AND MINUTES

I, the undersigned, do hereby certify that I am the duly qualified and acting Village Clerk of the Village of Buffalo Grove, Lake and Cook Counties, Illinois (the *"Village"*), and as such official I am the keeper of the records and files of the Village and of the President and Board of Trustees (the *"Board"*) thereof.

I do further certify that the foregoing is a full, true and complete transcript of that portion of the minutes of the meeting of the Board held on the 17th day of March, 2025 insofar as the same relates to the adoption of Ordinance No. O-2025-___ entitled:

> AN ORDINANCE providing for the issuance of approximately $26,000,000 General Obligation Bonds, Series 2025, of the Village of Buffalo Grove, Lake and Cook Counties, Illinois, to finance capital improvements in and for the Village including, but not limited to, construction of new fire stations and street improvements, providing for the levy and collection of a direct annual tax sufficient to pay the principal and interest on said bonds, and authorizing the sale of said bonds to the purchaser thereof.

a true, correct and complete copy of which said ordinance as adopted at said meeting appears in the foregoing transcript of the minutes of said meeting.

I do further certify that the deliberations of the Board on the adoption of said ordinance were conducted openly, that the vote on the adoption of said ordinance was taken openly, that said meeting was held at a specified time and place convenient and open to the public, specifically that members of the public were provided access to view the meeting via video conference and public access television, and to listen to the meeting via teleconference, and the Village provided a procedure for public comment in connection with the meeting, that notice of said meeting was duly given to all of the news media requesting such notice, that an agenda for said meeting was posted at the location where said meeting was held and at the principal office of the Board at least 72 hours in advance of the holding of said meeting, that at least one copy of said agenda was continuously available for public review during the entire 72-hour period preceding said meeting, that said agenda contained a separate specific item concerning the proposed adoption of said ordinance, a true, correct and complete copy of the agenda as so posted being attached hereto as *Exhibit A,* that said meeting was called and held in strict compliance with the provisions the Open Meetings Act of the State of Illinois, as amended, and with the provisions of the Illinois Municipal Code, as amended, and that the Board has complied with all of the applicable provisions of said Act and said Code and its procedural rules in the adoption of said ordinance.

IN WITNESS WHEREOF I hereunto affix my official signature and the seal of the Village this 17th day of March, 2025.

_____
Village Clerk

[SEAL]

STATE OF ILLINOIS)
) SS
COUNTY OF LAKE)

CERTIFICATE OF PUBLICATION IN PAMPHLET FORM

I, the undersigned, do hereby certify that I am the duly qualified and acting Village Clerk of the Village of Buffalo Grove, Lake and Cook Counties, Illinois (the *"Village"*), and as such official I am the keeper of the official journal of proceedings, books, records, minutes, and files of the Village and of the President and Board of Trustees of the Village.

I do further certify that on the 17th day of March, 2025, there was published in pamphlet form, by authority of the President and Board of Trustees, a true, correct, and complete copy of Ordinance No. O-2025-___ of the Village entitled:

> AN ORDINANCE providing for the issuance of approximately $26,000,000 General Obligation Bonds, Series 2025, of the Village of Buffalo Grove, Lake and Cook Counties, Illinois, to finance capital improvements in and for the Village including, but not limited to, construction of new fire stations and street improvements, providing for the levy and collection of a direct annual tax sufficient to pay the principal and interest on said bonds, and authorizing the sale of said bonds to the purchaser thereof.

and providing for the issuance of said bonds, and that the ordinance as so published was on that date readily available for public inspection and distribution, in sufficient number so as to meet the needs of the general public, at my office as Village Clerk located in the Village.

IN WITNESS WHEREOF I have affixed hereto my official signature and the seal of the Village this 17th day of March, 2025.

_____
Village Clerk

[SEAL]

STATE OF ILLINOIS)
) SS
COUNTY OF LAKE)

CERTIFICATE OF FILING

I, the undersigned, do hereby certify that I am the duly qualified and acting County Clerk of The County of Lake, Illinois, and as such officer I do hereby certify that on the _____ day of _____, 2025, there was filed in my office a properly certified copy of Ordinance No. O-2025-___ duly adopted by the President and Board of Trustees of the Village of Buffalo Grove, Lake and Cook Counties, Illinois, on the 17th day of March, 2025, and entitled:

> AN ORDINANCE providing for the issuance of approximately $26,000,000 General Obligation Bonds, Series 2025, of the Village of Buffalo Grove, Lake and Cook Counties, Illinois, to finance capital improvements in and for the Village including, but not limited to, construction of new fire stations and street improvements, providing for the levy and collection of a direct annual tax sufficient to pay the principal and interest on said bonds, and authorizing the sale of said bonds to the purchaser thereof.

and that the same has been deposited in, and all as appears from, the official files and records of my office.

IN WITNESS WHEREOF I have hereunto affixed my official signature and the seal of The County of Lake, Illinois, this _____ day of _____, 2025.

_____
County Clerk of The County of Lake, Illinois

[SEAL]

STATE OF ILLINOIS)
) SS
COUNTY OF COOK)

CERTIFICATE OF FILING

I, the undersigned, do hereby certify that I am the duly qualified and acting County Clerk of The County of Cook, Illinois, and as such officer I do hereby certify that on the _____ day of _____, 2025, there was filed in my office a properly certified copy of Ordinance No. O-2025-___ duly adopted by the President and Board of Trustees of the Village of Buffalo Grove, Lake and Cook Counties, Illinois, on the 17th day of March, 2025, and entitled:

> AN ORDINANCE providing for the issuance of approximately $26,000,000 General Obligation Bonds, Series 2025, of the Village of Buffalo Grove, Lake and Cook Counties, Illinois, to finance capital improvements in and for the Village including, but not limited to, construction of new fire stations and street improvements, providing for the levy and collection of a direct annual tax sufficient to pay the principal and interest on said bonds, and authorizing the sale of said bonds to the purchaser thereof.

and that the same has been deposited in, and all as appears from, the official files and records of my office.

IN WITNESS WHEREOF I have hereunto affixed my official signature and the seal of The County of Cook, Illinois, this _____ day of _____, 2025.

_____
County Clerk of The County of Cook, Illinois

[SEAL]

AGENDA ITEM SUMMARY

BUFFALO GROVE VILLAGE BOARD

Regular Meeting: March 17, 2025

AGENDA ITEM 9.b. R-2025-13
A Resolution Approving the Declaration of Trust of the Illinois Trust and Authorizing the Execution thereof and Authorizing Certain Officials to Act on Behalf of the Village of Buffalo Grove

Contacts

Liaison: Trustee Bocek
Staff: Chris Black

Staff Recommendation

Staff recommends approval.

Recommended Motion

I move to approve a Resolution Approving the Declaration of Trust of the Illinois Trust and Authorizing the Execution thereof and Authorizing Certain Officials to Act on Behalf of the Village of Buffalo Grove.

Summary

Please see the attached memorandum.

Strategic Alignment

Guiding Principle

Principle 1: Financially Responsible and Sound

Goal

Goal 1: Maintained effective village government: fiscally responsible and providing outstanding, responsive services

File Attachments

1. BOT 03.17.25 Trust Resolution Memo
2. BOT 03.17.2025 PFM Resolution

smart. with heart.
50 Raupp Blvd, Buffalo Grove, IL 60089 847-459-2500 vbg.org

MEMORANDUM

DATE: March 11, 2025

TO: Village Manager Dane Bragg

FROM: Chris Black, Finance Director

SUBJECT: Reimbursement Resolution – 2025 Bonds

RECOMMENDATION

Staff recommend the Village Board approve the attached resolution approving the declaration of trust and authorizing officials to act on behalf of the village to allow the placement of bond proceeds with the Illinois Institutional Investors Trust (PFM Asset Management).

BACKGROUND

The Village plans to issue bonds in an amount of approximately $24.7 million on March 17, 2025. The purpose of the bonds is for street repairs ($8 million) and construction of Fire Station #25 and Fire Station #26 ($17.4 million). Cash reserves may be used to fund a portion of the project.

With passage of the resolution, the total bonds will be held in a separate account with PFM Asset Management. PFM will provide reporting on the draw down of funds, arbitrage rebate compliance, and yield restrictions to ensure compliance with Internal Revenue Service regulations. The account will consist of fixed income-based investments to ensure safety, liquidity and interest earnings as the bond proceeds are expended over the next two years.

smart. with heart.
50 Raupp Boulevard, Buffalo Grove, IL 60089 847-459-2500 vbg.org

RESOLUTION 2025-xx

A RESOLUTION APPROVING THE DECLARATION OF TRUST OF THE ILLINOIS TRUST (FORMERLY KNOWN AS THE ILLINOIS INSTITUTIONAL INVESTORS TRUST) AND AUTHORIZING THE EXECUTION THEREOF AND AUTHORIZING CERTAIN OFFICIALS TO ACT ON BEHALF OF THE VILLAGE OF BUFFALO GROVE, LAKE AND COOK COUNTIES.

WHEREAS, the President and the Board of Trustees (the *"Board"*) of the Village of Buffalo Grove, Lake and Cook Counties, Illinois (the *"Village"*), has determined that it is necessary and in the best interests of the Village to finance construction of a new fire station and street improvements (the *"Project"*); and

WHEREAS, the President and the Board of Trustees (the *"Board"*) of the Village of Buffalo Grove, Lake and Cook Counties, Illinois (the *"Village"*) has been presented and review the Declaration of Trust dated October 18, 2022; and

WHEREAS, the Declaration of Trust creates a common law trust (the "Trust") to provide an instrumentality and agency through which public agencies organized under the laws of the State of Illinois may jointly act, agree, and cooperate in accordance with the laws of the State of Illinois in the performance of their responsibilities to invest available funds so as to enhance their investment opportunities pursuant to an investment program conducted in accordance with the laws of the State of Illinois, from time to time in effect, governing the investment of the funds of public agencies; and

WHEREAS, this Governing Board of the Agency has also been presented with and reviewed the appropriate Information Statement providing detailed information about the investment objectives, organization, structure, and operation of the Trust and its investment opportunities; and

WHEREAS the Agency is a public agency and unit of local government or school district within the meaning of Section 10 of Article VII of the 1970 Constitution of the State of Illinois (the "Illinois Constitution"), the Intergovernmental Cooperation Act, 5 ILCS 220/1, *et seq.*, and the Public Funds Investment Act, 30 ILCS 235/0.01, *et seq.*, and is authorized to enter into intergovernmental agreements, including the Declaration of Trust, pursuant to, *inter alia,* the provisions of Section 10, Article VII of the Illinois Constitution, the Intergovernmental Cooperation Act, and the Public Funds Investment Act; and

WHEREAS, the Agency does hereby find that by entering into the Declaration of Trust and becoming a Participant (as such term is defined in Section 1.4 of the Declaration of Trust) in the Trust, it shall be better able to perform its responsibility to invest its funds in accordance with the laws of the State of Illinois; and

WHEREAS, the Agency does hereby find and declare that it is in the best interest of the residents of the Agency that the Agency enter into the Declaration of Trust, become a Participant of the Trust, and use the Trust's

services from time to time at the discretion of the Treasurer [and/or other authorized official];

NOW, THEREFORE, Be It and It Is Hereby Resolved by the President and the Board of Trustees of the Village of Buffalo Grove, Lake and Cook Counties, Illinois, as follows:

Section 1. The facts and statements contained in the preamble to this Resolution are hereby found to be true and correct and are hereby adopted as part of this Resolution.

Section 2. The terms and conditions of the Declaration of Trust are hereby approved, and the Agency is hereby authorized to become a Participant in the Trust. The persons listed below are authorized to execute the said Declaration of Trust and enter into the Intergovernmental Agreement, and said persons are duly authorized present incumbents of said offices; and actual samples of their respective signatures are listed below:

Eric Smith	Village President	
Print Name	Title	Signature
Dane Bragg	Village Manger	
Print Name	Title	Signature

Section 3. Ratification. All actions of the officers, agents and employees of the Village that are in conformity with the purposes and intent of this Resolution, whether taken before or after the adoption hereof, are hereby ratified, confirmed and approved.

Section 4. Severability. If any section, paragraph, clause or provision of this Resolution shall be held to be invalid or unenforceable for any reason, the invalidity or unenforceability of such section, paragraph, clause or provision shall not affect any of the remaining provisions of this Resolution.

Section 5. Repeal. All resolutions or parts thereof in conflict herewith be and the same are hereby repealed and this Resolution shall be in full force and effect forthwith upon its adoption.

ADOPTED by the Board on January 21, 2025.

AYES: _____

_____

NAYS: _____

ABSENT: _____

APPROVED on January 21, 2025.

_____

President, Village of Buffalo Grove, Lake and Cook Counties, Illinois

RECORDED in the Village Records on January 21, 2025.

Attest:

_____

Village Clerk, Village of Buffalo Grove,

Lake and Cook Counties, Illinois

DRAFT

AGENDA ITEM SUMMARY

BUFFALO GROVE VILLAGE BOARD

Regular Meeting: March 17, 2025

AGENDA ITEM 9.c. O-2025-46
Ordinance authorizing a Contract with Wallace Roberts & Todd LLC., for Clove Park Concept Design Services.

Contacts

Liaison: Trustee Weidenfeld
Staff: Nicole Woods

Staff Recommendation

Staff recommends approval.

Recommended Motion

I move to approve an Ordinance authorizing a Contract with Wallace Roberts & Todd LLC., for Clove Park Concept Design Services.

Summary

See attached memorandum.

Strategic Alignment

Guiding Principle

Principle 3: Plan and Invest in the Future

Goal

Goal 1: Maintained effective village government: fiscally responsible and providing outstanding, responsive services
Goal 2: Enhanced, beautiful, safe and sustainable neighborhoods
Goal 3: Strengthened Buffalo Grove community identity and pride
Goal 5: More livable Buffalo Grove community with leisure experiences for all

File Attachments

1. Memo - Agreement for Clove Park Design
2. DRAFT - Ordinance - Clove Park Design
3. Professional Services Agreement-Clove Park

smart. with heart.
50 Raupp Blvd, Buffalo Grove, IL 60089 847-459-2500 vbg.org

MEMORANDUM

DATE:	January 30, 2025
TO:	Village Manager Dane Bragg
FROM:	Nicole Woods, Director of Community Development
SUBJECT:	Agreement with WRT for Clove Park Concept Plan

RECOMMENDATION

Staff is recommending approval on ordinance authorize an agreement with Wallace, Roberts and Todd (WRT) for Clove Park concept design services.

BACKGROUND

As the Clove is approaching the mid-mark of its completion. With the foundation in place, momentum rising, and additional opportunities opening, the time is ripe to drawn upon the concepts above to guide a vital component of The Clove yet to be designed: the one-acre central park.

Community leaders, staff, residents, business and other stakeholders greatly value this element of The Clove and view its significance to extend beyond the development and onto the community and regional stage. As a result, the Village has not only retained ownership of the park but also intends on leading its design.

PROPOSED CONTRACT

Consultant Team. The attached agreement is with WRT Planning and Design, a firm that specializes in landscape design. Their portfolio includes open space design that scales from 0.25 to 4,000 acres. Their skillset is in navigating the environmental, fiscal, structural, and community constraints and demands to create meaningful, authentic open spaces that weave in playful, artistic, educational, interactive, aesthetic, and functional elements.

A key example of this type of ingenuity is exemplified from their work at Ashland Zocalo park in San Leandro, California, which is about 25 miles east of San Francisco. This park was a former one-acre car lot that is surrounded by streets, parking lots, apartments, and other commercial outlots. WRT and their partners were charged with developing a community-driven design concept for the new park. WRT and partners held a series of community meetings and were provided some key themes and objectives for the

smart. with heart.
50 Raupp Boulevard, Buffalo Grove, IL 60089 847-459-2500 vbg.org

park which included authenticity, functionality, environmental sustainability, art, local ecology, safety, and the notion that the park would be an extension of the community's back or front yard or in other words, the "neighborhood living room."

Building from these community engagement themes and findings, the landscape architect created a final master plan that included a multi-purpose lawn, play areas and structures, interactive water feature, murals, outdoor stage, a walking loop, and a public plaza with shade structures for pop-up markets and food trucks and a demonstration garden developed by the local high school. The park, which was named "Zocalo" (Spanish for public square), was fitting given the large Latino demographic in the area.

WRT would like to apply a similar type of ingenuity to the Clove Park.

Scope of Work and Timeline. WRT proposes that the objectives in designing the central park are best understood in realizing its significance within the context of the key themes of open space, connectivity, civic pride, focal points, and character as identified below.

Objective 1. Identify/assert its position within the greater local and regional parks and open spaces network.

Objective 2. Enhance the Civic Triangle

Objective 3. Capture and integrate the Urban/Suburban Dynamic inherent to the Clove's Development

Objective 4. Accommodate activity and that is versatile and adaptable to variety of uses and weather.

Objective 5. Become an iconic image and landmark for the Village that aligns with the community's vison and character.

The following is a framework for the Clove park design process. The final results include a conceptual plan and rendering that can then be utilized as a concept for construction and engineering plans.

smart. with heart.
50 Raupp Boulevard, Buffalo Grove, IL 60089 847-459-2500 vbg.org

Outreach. The Clove project will have an outreach process that includes stakeholders such as the Clove property owners and developers (Kensington and Urban Street), Village leadership, residents, nearby businesses and property owners, and the Park District.

The outreach will include in-person and virtual engagement. The intention of this integration is to help optimize and customize outreach given the Village's institutional knowledge as well as help reduce labor and cost on behalf of WRT.

Cost. The cost of the park concept plan will be approximately $108,110. Ultimately, this project could be reimbursed with the Lake Cook Corridor TIF funds, once TIF funds are generated.

NEXT STEPS

Upon approval, staff will be looking to work WRT to kick-off this project in Spring 2025.

smart. with heart.
50 Raupp Boulevard, Buffalo Grove, IL 60089 847-459-2500 vbg.org

ORDINANCE 2025-xxx

AN ORDINANCE AUTHORIZING EXECUTION OF AN AGREEMENT WITH WALLACE ROBERTS & TODD, LLC FOR CLOVE PARK CONCEPT DESIGN SERVICES

WHEREAS the Village of Buffalo Grove is a home rule unit pursuant to the Illinois Constitution of 1970; and

WHEREAS the Village seeks to enter into a Professional Services Agreement with Wallace Roberts & Todd LLC., for Clove Park Concept Design Services.

NOW THEREFORE BE IT ORDAINED by the President and Board of Trustees of the Village of Buffalo Grove, Cook and Lake Counties, Illinois, as follows:

SECTION 1. The foregoing recitals are hereby adopted and incorporated and made a part of this Ordinance as if fully set forth herein.

SECTION 2. The Village Manager is authorized to execute an agreement with Wallace Roberts & Todd LLC., for Clove Park Concept Design Services in an amount not to exceed $108,110.00, pending final review and approval by the Village Attorney.

SECTION 3. If any section, paragraph, clause or provision of this Ordinance shall be held invalid, the invalidity thereof shall not affect any other provision of this Ordinance.

SECTION 4. This Ordinance shall be in full force and effect from and after its passage and approval and shall not be codified.

AYES: _____
NAYES: _____
ABSENT: _____
PASSED: _____, 2025
APPROVED: _____, 2025
PUBLISHED: _____, 2025

ATTEST:

_____
Janet M. Sirabian, Village Clerk

APPROVED:

_____
Eric N. Smith, Village President

DRAFT

smart. with heart.
50 Raupp Blvd, Buffalo Grove, IL 60089 847-459-2500 vbg.org

VILLAGE OF BUFFALO GROVE
PROFESSIONAL SERVICES AGREEMENT
Clove Park Concept Design Services

THIS AGREEMENT is dated as of the _____ day of _____ 20__ ***("Agreement")*** and is by and between the **VILLAGE OF BUFFALO GROVE,** an Illinois home rule municipal corporation ***("Village")*** and the Consultant identified in Subsection 1A below.

IN CONSIDERATION OF the recitals and the mutual covenants and agreements set forth in this Agreement, and pursuant to the Village's statutory and home rule powers, the parties agree as follows:

SECTION 1. CONSULTANT.

A. Engagement of Consultant. The Village desires to engage the Consultant identified below to provide all necessary professional consulting services and to perform the work in connection with the project identified below:

Company. WRT ("Consultant")
Street: 123 S. Broad Street, Suite 1450
City, State, Zip: Philadelphia, PA 19109
Telephone: 215.430.5077
Email: cneer@wrtdesign.com

B. Project Description. The Consultant shall provide Concept Design Services for the Village of Buffalo Grove as further described in Exhibit B.

C. Representations of Consultant. The Consultant has submitted to the Village a description of the services to be provided by the Consultant, a copy of which is attached as Exhibit B to this Agreement ("Services"). The Consultant represents that it is financially solvent, has the necessary financial resources, and is sufficiently experienced and competent to perform and complete the professional consulting services set forth in Exhibit B Consultant will perform its services with the same level of skill ordinarily exercised by members if the same profession acting at the same point in time, under similar circumstances and in the same geographical region (the “Standard of Care”).

SECTION 2. SCOPE OF SERVICES.

A. **Retention of the Consultant.** The Village retains the Consultant to perform, and the Consultant agrees to perform, the Services.

B. **Services.** The Consultant shall provide the Services pursuant to the terms and conditions of this Agreement.

C. **Commencement.** Time of Performance. The Consultant shall commence the Services immediately upon receipt of written notice from the Village that this Agreement has been fully executed by the Parties (the "Commencement Date"). The Consultant shall diligently and continuously prosecute the Services until the completion of the Work.

D. **Reporting.** The Consultant shall regularly report to the Village Manager, or his/her designee, regarding the progress of the Services during the term of this Agreement.

SECTION 3. COMPENSATION AND METHOD OF PAYMENT.

A. **Agreement Amount.** The total amount billed for the Services during the term of this Agreement shall not exceed the amount identified in the Schedule of Prices section in Exhibit A, unless amended pursuant to Subsection 8A of this Agreement.

B. **Invoices and Payment.** The Firm shall submit invoices to the Village for all Services and subcontractor services monthly. The Invoices shall be in a Village approved and itemized format for those portions of the Services performed and completed by the Firm. The amount billed in any such invoice shall be based on the method of payment set forth in Exhibit A. The Village shall pay to the Firm the amount billed pursuant to the Illinois Local Government Prompt Payment Act (50 ILCS 505/1 et seq.)

C. **Records**. The Consultant shall maintain records showing actual time devoted and costs incurred and shall permit the authorized representative of the Village to inspect and audit all data and records of the Consultant for work done under the Agreement. The records shall be made available to the Village at reasonable times during the Agreement period, and for three years after the termination of the Agreement.

D. **Claim In Addition to Agreement Amount**. if the Consultant wishes to make a claim for additional compensation as a result of action taken by the Village, the Consultant shall provide written notice to the Village of such claim within 7 calendar days after occurrence of such action as provided by Subsection 8.D. of this Agreement, and no claim for additional compensation shall be valid unless made in accordance with this Subsection. Any changes in this Agreement Amount shall be valid only upon written amendment pursuant to Subsection 8.A. of this Agreement. Regardless of the decision of the Village relative to a claim submitted by the Consultant, the Consultant shall proceed with all of the Services required to complete the project under this Agreement as determined by the Village without interruption.

SECTION 3. COMPENSATION AND METHOD OF PAYMENT (cont.)

E. **Taxes, Benefits and Royalties.** The Agreement Amount includes all applicable federal, state, and local taxes of every kind and nature applicable to the Services as well as all taxes, contributions, and premiums for unemployment insurance, old age or retirement benefits, pensions, annuities, or similar benefits and all costs, royalties and fees arising from the use on, or the incorporation into, the Services, of patented or copyrighted equipment, materials, supplies, tools, appliances, devices, processes, or inventions. All claims or right to claim additional compensation by reason of the payment of any such tax, contribution, premium, costs, royalties, or fees is hereby waived and released by consultant.

F. **Final Acceptance.** The Services, or, if the Services are to be performed in separate phases, each phase of the Services, shall be considered complete on the date of final written acceptance by the Village of the Services or each phase of the Services, as the case may be, which acceptance shall not be unreasonably withheld or delayed.

SECTION 4. PERSONNEL SUBCONTRACTORS.

A. **Key Project Personnel.** The Key Project Personnel identified in Exhibit B shall be primarily responsible for carrying out the Services on behalf of the Consultant. The Key Project Personnel shall not be changed without the Village's prior written approval.

B. **Availability of Personnel.** The Consultant shall provide all personnel necessary to complete the Services including, without limitation, any Key Project Personnel identified in this Agreement. The Consultant shall notify the Village as soon as practicable prior to terminating the employment of, reassigning, or receiving notice of the resignation of, any Key Project Personnel. The Consultant shall have no claim for damages and shall not bill the Village for additional time and materials charges as the result of any portion of the Services which must be duplicated or redone due to such termination or for any delay or extension of the Time of Performance as a result of any such termination, reassigning, or resignation.

SECTION 4. PERSONNEL SUBCONTRACTORS (cont.)

C. **Approval and Use of Subcontractors**. The Consultant shall perform the Services with its own personnel and under the management, supervision, and control of its own organization unless otherwise approved by the Village in writing. All subcontractors and subcontracts used by the Consultant shall be acceptable to, and approved in advance by, the Village. The Village's approval of any subcontractor or subcontract shall not relieve the Consultant of full responsibility and liability for the provision, performance, and completion of the Services as required by the Agreement. All Services performed under any subcontract shall be subject to all of the provisions of this Agreement in the same manner as if performed by employees of the Consultant. For purposes of this Agreement, the term "Consultant" shall be deemed also to refer to all subcontractors of the Consultant, and every subcontract shall include a provision binding the subcontractor to all provisions of this Agreement.

D. **Removal of Personnel and Subcontractors.** If any personnel or subcontractor fails to perform the Services in a manner satisfactory to the Village, the Consultant shall immediately upon notice from the Village remove and replace such personnel or subcontractor. The Consultant shall have no claim for damages, for compensation in excess of the amount contained in this Agreement of for a delay or extension of the Time of Performance as a result of any such removal or replacement. The Firm shall employ competent staff and shall discharge, at the request of the Village Manager, any incompetent, unfaithful, abusive or disorderly staff or subcontractor in its employ.

SECTION 5. CONFIDENTIAL INFORMATION.

A. **Confidential Information.** The term "Confidential Information" shall mean information in the possession or under the control of the Village relating to the technical, business or corporate affairs of the Village; Village property; user information, including, without limitation, any information pertaining to usage of the Village's computer system, including and without limitation, any information obtained from server logs or other records of electronic or machine readable form; and the existence of, and terms and conditions of, this Agreement. Village Confidential Information shall not include information that can be demonstrated: (i) to have been rightfully in the possession of the Consultant from a source other than the Village prior to the time of disclosure of said information to the Consultant under this Agreement ("Time of Disclosure"); (ii) to have been in the public domain prior to the Time of Disclosure; (iii) to have become part of the public domain after the Time of Disclosure by a publication or by any other means except an unauthorized act or omission or breach of this Agreement on the part of the Consultant or the Village; or (iv) to have been supplied to the Consultant after the Time of Disclosure without restriction by a third party who is under no obligation to the Village to maintain such information in confidence.

B. **No Disclosure of Confidential Information by the Consultant**. The Consultant acknowledges that it shall, in performing the Services for the Village under this Agreement, have access to or be directly or indirectly exposed to Confidential Information. The Consultant shall hold confidential all Confidential Information and shall not disclose or use such Confidential Information without express prior written consent of the Village. The Consultant shall use reasonable measures at least as strict as those the Consultant uses to protect its own confidential information. Such measures shall include, without limitation, requiring employees and subcontractors of the Consultant to execute a non-disclosure agreement before obtaining access to Confidential Information.

SECTION 6. WARRANTY; INDEMNIFICATION; INSURANCE

A. **Warranty of Services.** The Consultant warrants that the Services shall be performed in accordance with the Standard of Care and the terms of this agreement.

B. **Indemnification**. The Consultant shall, without regard to the availability or unavailability of any insurance, either of the Village or the Consultant, indemnify and save harmless, the Village, and its officials, and employees, against, damages, liabilities, reasonable and necessary losses, and expenses, including reasonable attorneys' fees (where recoverable by applicable law) incurred as a result of third-party claims, but only to the proportionate extent they are caused by the negligent performance by the Consultant, and except to the extent caused by the negligence of the Village its officials, employees or anyone for whom Consultant is not legally liable.

C. **Insurance.** Contemporaneous with the Consultant's execution of this Agreement, the Consultant shall provide certificates of insurance and endorsements, all with coverages and limits acceptable to the Village, and evidencing at least the minimum insurance coverages and limits as set forth in Exhibit C to this Agreement. For good cause shown, the Village Manager may extend the time for submission of the required certificates of insurance and endorsements upon such terms, and with such assurances of complete and prompt performance, as the Director may impose in the exercise of his sole discretion. Such certificates and policies shall be in a form acceptable to the Village and from companies with a general rating of A minus, and a financial size category of Class X or better, in Best's Insurance Guide. Such insurance policies shall provide that no cancellation of, any insurance shall become effective until the expiration of 30 calendar days after written notice thereof shall have been given by the insurance company to the Village (ten (10) days in the event of non-payment of premium). The Consultant shall, at all times during the term of this Agreement, maintain and keep in force, at the Consultant's expense, the insurance coverages provided above, including, without limitation, at all times while correcting any failure to meet the warranty requirements of Subsection 6.A., Warranty of Services, of this Agreement.

D. **No Personal Liability**. No elected or appointed official, agent, or employee of the Village shall be personally liable, in law or in contract, to the Consultant as the result of the execution of this Agreement. No employees of the Consultant shall have personal liability under this agreement.

SECTION 7. CONSULTANT AGREEMENT GENERAL PROVISIONS.

A. **Relationship of the Parties**. The Consultant shall act as an independent contractor in providing and performing the Services. Nothing in, nor done pursuant to, this Agreement shall be construed (i) to create the relationship of principal and agent, employer and employee, partners, or joint ventures between the Village and Consultant; or (ii) to create any relationship between the Village and any subcontractor of the Consultant.

B. **Conflict of Interest.** The Consultant represents and certifies that, to the best of its knowledge, (1) no Village employee or agent is interested in the business of the Consultant or this Agreement; (2) as of the date of this Agreement neither the Consultant nor any person employed or associated with the Consultant has any interest that would conflict in any manner or degree with the performance of the obligations under this Agreement; and (3) neither the Consultant nor any person employed by or associated with the Consultant shall at any time during the term of this Agreement obtain or acquire any interest that would conflict in any manner or degree with the performance of the obligations under this Agreement.

C. **No Collusion**. The Consultant represents and certifies that the Consultant is not barred from contracting with a unit of state or local government as a result of (i) a delinquency in the payment of any tax administered by the Illinois Department of Revenue unless the Consultant is contesting, in accordance with the procedures established by the appropriate revenue act, its liability for the tax or the amount of the tax, as set forth in Section11-42.1-1 et seq. of the Illinois Municipal Code, 65 ILCS 5/11-42.1-1 et seq.; or (ii) a violation of either Section 33E-3 or Section 33E-4 of Article 33E of the Criminal Code of 1961, 720 1LCS 5/33E-1 et seq. The Consultant represents that the only persons, firms, or corporations interested in this Agreement as principals are those disclosed to the Village prior to the execution of this Agreement, and that this Agreement is made without collusion with any other person, firm, or corporation. If at any time it shall be found that the Consultant has, in procuring this Agreement, colluded with any other person, firm, or corporation, then the Consultant shall be liable to the Village for all loss or damage that the Village may suffer, and this Agreement shall, at the Village's option, be null and void.

D. **Sexual Harassment Policy.** The Consultant certifies that it has a written sexual harassment policy in full compliance with Section 2-105(A)(4) of the Illinois Human Rights Act, 775 ILCS 512-105(A)(4).

E. **Termination**. Notwithstanding any other provision hereof, the Village may terminate this Agreement, without cause, at any time upon 15 calendar days prior written notice to the Consultant. In the event that this Agreement is so terminated, the Consultant shall be paid for Services actually performed and reimbursable expenses actually incurred, if any, prior to termination, not exceeding the value of the Services completed as determined as provided in Exhibit B. However, the Village shall not withhold amounts from the Consultant’s compensation to impose a penalty or liquidated damages on the Consultant unless the Consultant agrees or has been found liable for the amounts in a binding dispute resolution proceeding.

F. **Term**. The term of this agreement shall be for one year from the date of award.

SECTION 7. CONSULTANT AGREEMENT GENERAL PROVISIONS (cont.)

G. **Compliance with Laws and Grants.** Consultant shall give all notices, pay all fees, and take all other action that may be necessary to ensure that the Services are provided, performed, and completed in accordance with all required governmental permits, licenses, or other approvals and authorizations that may be required in connection with providing, performing, and completing the Services, and with all applicable statutes, ordinances, rules, and regulations, including without limitation the Fair Labor Standards Act; any statutes regarding qualification to do business; any statutes prohibiting discrimination because of, or requiring affirmative action based on, race, creed, color, national origin, age, sex, or other prohibited classification, including, without limitation, the Americans with Disabilities Act of 1990, 42 U.S.C. §§ 12101 et seq., and the Illinois Human Rights Act, 775 ILCS 5/1-101 et seq. Consultant shall also comply with all conditions of any federal, state, or local grant received by Owner or Consultant with respect to this Agreement or the Services. Every provision of law required by law to be inserted into this Agreement shall be deemed to be inserted herein.

H. **Default.** if it should appear at any time that the Consultant has failed or refused to prosecute, or has delayed in the prosecution of, the Services with diligence at a rate that assures completion of the Services in full compliance with the requirements of this Agreement, or has otherwise failed, refused, or delayed to perform or satisfy the Services or any other requirement of this Agreement ("Event of Default"), and fails to cure any such Event of Default within fourteen (14) calendar days after the Consultant's receipt of written notice of such Event of Default from the Village, then the Village shall have the right, without prejudice to any other remedies provided by law or equity, to pursue any one or more of the following remedies:

1. **Cure by Consultant.** The Village may require the Consultant, within a reasonable time, to complete or correct all or any part of the Services that are the subject of the Event of Default; and to take any or all other action necessary to bring the Consultant and the Services into compliance with this Agreement.

2. **Termination of Agreement by Village.** The Village may terminate this Agreement without liability for further payment of amounts due or to become due under this Agreement.

I. **No Additional Obligation.** The Parties acknowledge and agree that the Village is under no obligation under this Agreement or otherwise to negotiate or enter into any other or additional contracts or agreements with the Consultant or with any vendor solicited or recommended by the Consultant.

J. **Village Board Authority**. Notwithstanding any provision of this Agreement, any negotiations, or agreements with, or representations by the Consultant to vendors shall be subject to the approval of the Village Board of Trustees. The Village shall not be liable to any vendor or other third party for any agreements made by the Consultant, purportedly on behalf of the Village, without the knowledge and approval of the Village Board of Trustees.

K. **Mutual Cooperation**. The Village agrees to cooperate with the Consultant in the performance of the Services, including meeting with the Consultant and providing the Consultant with such confidential and non-confidential information that the Village may have that may be relevant and helpful to the Consultant's performance of the Services. The Consultant agrees to cooperate with the Village in the performance of the Services to complete the Work and with any other consultants engaged by the Village.

SECTION 7. CONSULTANT AGREEMENT GENERAL PROVISIONS (cont.)

L. **News Releases**. The Consultant shall not issue any news releases or other public statements regarding the Services without prior approval from the Director. Nothing Herein shall limit the Firm's right to identify the Village as a client of the Firm or from disclosing matters arising from the relationship between the Village and the Firm that are subject to disclosure under the Illinois Freedom of Information Act, (5 ILCS 140, et seq)

M. **Ownership**. Provided Village has complied with its obligations under this Contract including, but not limited to, payment in full to Consultant for services rendered pursuant to the other terms of this Contract, Designs, drawings, plans, specifications, photos, reports, information, observations, records, opinions, communications, digital files, calculations, notes, and any other documents, data, or information, in any form, prepared, collected, or received by the Consultant in connection with any or all of the Services to be performed under this Agreement ("Documents") shall be and remain the exclusive property of the Village. At the Village's request, or upon termination of this Agreement, the Consultant shall cause the Documents to be promptly delivered to the Village, in original format or a suitable facsimile acceptable to the Village

N. **Joint Purchasing/Purchasing Extension.** The purchase of goods and services pursuant to the terms of this Agreement shall also be offered for purchases to be made by other Village, as authorized by the Governmental Joint Purchasing Act, 30 ILCS 525/0.01, et seq. (the "Act"). All purchases and payments made under the Act shall be made directly by and between each municipality and the Consultant. The Consultant agrees that the Village shall not be responsible in any way for purchase orders or payments made by the other Village. The Consultant further agrees that all terms and conditions of this Agreement shall continue in full force and effect as to other Village during the extended term of this Agreement.

The Consultant and the other Village may negotiate such other and further terms and conditions to this Agreement ("Other Terms") as individual projects may require. In order to be effective, Other Terms shall be reduced to writing and signed by a duly authorized representative of both the Consultant and the other municipality.

The Consultant shall provide other Village with all documentation as required in the Request for Qualifications, and as otherwise required by the Village including, but not limited to:

- Certificate of insurance naming each additional municipality as an additional insured

SECTION 8. GENERAL PROVISIONS.

A. **Amendment.** No amendment or modification to this Agreement shall be effective unless and until such amendment or modification is in writing, properly approved in accordance with applicable procedures, and executed.

B. **Assignment**. This Agreement may not be assigned by the Village or by the Consultant without the prior written consent of the other party.

C. **Binding Effect.** The terms of this Agreement shall bind and inure to the benefit of the Parties hereto and their agents, successors, and assigns

SECTION 8. GENERAL PROVISIONS (cont)

D. **Notice**. Any notice or communication required or permitted to be given under this Agreement shall be in writing and shall be delivered (i) personally, (ii) by a reputable overnight courier, (iii) by certified mail and deposited in the U.S. Mail, postage prepaid, (iv) by facsimile, or (v) by electronic Internet mail ("e-mail"). Facsimile notices shall be deemed valid only to the extent that they are (a) actually received by the individual to whom addressed and (b) followed by delivery of actual notice in the manner described in either (i), (ii), or (iii) above within three business days thereafter at the appropriate address set forth below. E-mail notices shall be deemed valid and received by the addressee thereof when delivered by e-mail and (a) opened by the recipient on a business day at the address set forth below, and (b) followed by delivery of actual notice in the manner described in either (i), (ii) or (iii) above within three business days thereafter at the appropriate address set forth below. Unless otherwise expressly provided in this Agreement, notices shall be deemed received upon the earlier of (a) actual receipt; (b) one business day after deposit with an overnight courier as evidenced by a receipt of deposit; or (c) three business days following deposit in the U.S. mail. By notice complying with the requirements of this Subsection, each Party shall have the right to change the address or the addressee, or both, for all future notices and communications to such party, but no notice of a change of addressee or address shall be effective until actually received. The provisions of this Section 8 D shall not control with respect to the manner of communications utilized by the consultant in rendering the Services.

Notices and communications to the Village shall be addressed to, and delivered at, the following address:

Village of Buffalo Grove ("Village")
50 Raupp Blvd.
Buffalo Grove, IL 60089
Attn: Dane Bragg
Email: dbragg@vbg.org
cc: pbrankin@schainbanks.com

With a copy to

Law Firm.
Street
City, State, Zip
Attention:
Email:

Notices and communications to the Consultant shall be addressed to, and delivered at, the following address:

Company. ("Consultant")
Street
City, State, Zip
Attention:
Email:

SECTION 8. GENERAL PROVISIONS (cont)

E. **Third Party Beneficiary.** No claim as a third-party beneficiary under this Agreement by any person, firm, or corporation other than the Consultant shall be made or be valid against the Village.

F. **Provisions Severable**. If any term, covenant, condition, or provision of this Agreement is held by a court of competent jurisdiction to be invalid, void, or unenforceable, the remainder of the provisions shall remain in full force and effect and shall in no way be affected, impaired or invalidated.

G. **Time**. Time is of the essence in the performance of this Agreement. However, Consultant shall not be responsible for any delays in the project resulting from circumstances beyond the Consultant's reasonable control nor shall Consultant be deemed to be in default of this Agreement for same.

H. **Governing Laws.** This Agreement shall be interpreted according to the internal laws, but not the conflict of laws rules, of the State of Illinois. Venue shall be in Cook County, Illinois

I. **Entire Agreement**. This Agreement constitutes the entire agreement between the parties and supersedes any and all previous or contemporaneous oral or written agreements and negotiations between the Village and the Consultant with respect to the Request for Proposal.

J. **Waiver.** No waiver of any provision of this Agreement shall be deemed to or constitute a waiver of any other provision of this Agreement (whether or not similar) nor shall any such waiver be deemed to or constitute a continuing waiver unless otherwise expressly provided in this Agreement.

K. **Exhibit.** Exhibit A, Exhibit B, and Exhibit C are attached hereto, and by this reference incorporated in and made a part of this Agreement. In the event of a conflict between the Exhibit and the text of this Agreement, the text of this Agreement shall control.

L. **Rights Cumulative.** Unless expressly provided to the contrary in this Agreement, each and every one of the rights, remedies, and benefits provided by this Agreement shall be cumulative and shall not be exclusive of any other such rights, remedies, and benefits allowed by law

M. **Counterpart Execution.** This Agreement may be executed in several counterparts, each of which, when executed, shall be deemed to be an original, but all of which together shall constitute one and the same instrument.

N. **Calendar Days and Time**. Unless otherwise provided in this Contract, any reference in this Contract to "day" or "days" shall mean calendar days and not business days. If the date for giving of any notice required to be given, or the performance of any obligation, under this Contract falls on a Saturday, Sunday or federal holiday, then the notice or obligation may be given or performed on the next business day after that Saturday, Sunday or federal holiday.

O. **No Waiver of Tort Immunity.** Nothing contained in this Agreement shall constitute a waiver by the Village of any right, privilege or defense available to the Village under statutory or common law, including, but not limited to, the Illinois Governmental and Governmental Employees Tort Immunity Act, 745 ILCS 10/1-101 et seq., as amended.

SECTION 8. GENERAL PROVISIONS (cont)

P. **Freedom of Information.** The Firm agrees to furnish all documentation related to the Contract, the Work and any documentation related to the Village required under an Illinois Freedom of Information Act (ILCS 140/1 et. seq.) ("FOIA") request within five (5) calendar days after the Village issues Notice of such request to the Firm. The Firm agrees to defend, indemnify and hold harmless the Village, and agrees to pay all reasonable costs connected therewith (including, but not limited to attorney's and witness fees, filing fees and any other expenses) for the Village to defend any and all causes, actions, causes of action, disputes, prosecutions, or conflicts arising from Firm's actual or alleged violation of FOIA or the Firm's failure to furnish all documentation related to a FOIA request within five (5) calendar days after Notice from the Village for the same. Furthermore, should the Firm request that the Village utilize a lawful exemption under FOIA in relation to any FOIA request thereby denying that request, Firm agrees to pay all costs connected therewith (such as attorneys' and witness fees, filing fees and any other expenses) to defend the denial of the request. This defense shall include, but not be limited to, any challenged or appealed denials of FOIA requests to either the Illinois Attorney General or a court of competent jurisdiction.

Q. **Limitation of Liability**

Except for Consultant's indemnification obligations under this Agreement, the total liability, in the aggregate, of Consultant and Consultant's officers, directors, employees, agents, and consultants to Village and anyone claiming by, through or under Village, for any and all injuries, claims, losses, expenses, or damages whatsoever arising out of or in any way related to Consultant's services, the Project or this Agreement, from any cause or causes whatsoever, including but not limited to, negligence, strict liability, breach of contract or breach of warranty shall not exceed the total compensation received by Consultant under this Agreement.

This section shall survive completion or termination of this Agreement, but under no circumstances shall either party call for mediation of any claim or dispute arising out of this Agreement after such period of time as would normally bar the initiation of legal proceedings to litigate such claim or dispute under the applicable law.

Acknowledgement.

The undersigned hereby represent and acknowledge that they have read the foregoing Agreement, that they know its contents, and that in executing this Agreement they have received legal advice regarding the legal rights of the party on whose behalf they are executing this Agreement, and that they are executing this Agreement as a free and voluntary act and on behalf of the named parties.

IN WITNESS WHEREOF, the Parties have executed this Agreement as of the dates set forth below.

VILLAGE OF BUFFALO GROVE

By: _____
Dane Bragg, Village Manager

Date:_____

Firm: WRT

By:_____

Title: _____

Date:_____

Exhibit A.
Agreed Upon Pricing Structure

FEE PROPOSAL

CONCEPT DESIGN FOR THE CLOVE PARK

Task 1	Project Initiation (2 weeks)	
Subtask 1.1	Kick-off/Stakeholder Meeting Preparation & Base Drawing Compilation	$ 5,960.00
Subtask 1.2	Site Visit and Kick-off/Stakeholder Meeting #1 (Trip A)	$ 10,800.00
	Task Sub-Total	**$ 16,760.00**

Task 2	Visioning & Engagement (6 weeks)	
Subtask 2.1	Site Context Study	$ 8,160.00
Subtask 2.2	Community Engagement Materials Preparation	$ 13,980.00
Subtask 2.3	Stakeholder Meeting #2 (In-Person; Trip B)	$ 4,200.00
Subtask 2.4	Community Engagement #1 (In-Person; Trip B)	$ 4,200.00
Subtask 2.5	SurveyMonkey Prep, Launch & Result Summary (Continue into Task 3)	$ 3,200.00
	Task Sub-Total	**$ 33,740.00**

Task 3	Concept Development (5 weeks)	
Subtask 3.1	Stakeholder & Community Feedback Synthesis	$ 1,700.00
Subtask 3.2	Draft Concept Development with Materials Palette	$ 16,660.00
Subtask 3.3	Stakeholder Meeting #3 (Virtual)	$ 1,820.00
Subtask 3.4	Develop Refined Concept Plan	$ 8,780.00
	Task Sub-Total	**$ 28,960.00**

Task 4	Final Concept Plan Deliverables & Public Reveal (3 .5 weeks)	
Subtask 4.1	Marketing Images	$ 8,370.00
Subtask 4.2	Rough Order of Magnitude Cost Estimate	$ 3,640.00
Subtask 4.3	Stakeholder Meeting #4 (In-Person; Trip C)	$ 3,320.00
Subtask 4.4	Community Engagement #2 (In-Person; Trip C) – Public Reveal	$ 3,320.00
	Task Sub-Total	**$ 18,650.00**

Sub-Total	**$ 98,110.00**
Reimbursables (Flights, Hotels, Car Rental, Printing)	**$ 10,000.00**
Total	**$ 108,110.00**

Note: The fees indicated above are intended to be a lump-sum fee.

Exhibit B.
Description of Work

The Clove Park
SCOPE OF SERVICES

PROJECT UNDERSTANDING

The Clove, a new mixed-use Village Center, is located along the Lake Cook Corridor, commercial throughfare in the Village of Buffalo Grove (VBG). The development of the Clove implements the vision of the 2018 Lake Cook Corridor Plan (LCCP) that was adopted by VBG as part of the Comprehensive Plan. The construction of the Clove started in September 2022, and VBG is seeking Concept Design for the Clove Park, a 0.85-acre open space situated in the center of the Clove. The following goals of the Clove Park (the Park) were established by the Village:

Goal 1: Identify/assert its position within the greater local and regional parks and open spaces network.
The abundance and accessibility of parks and open spaces in Buffalo Grove is highly valued as a great asset and pride of the community. The Park is well positioned to strengthen the continuity of the open space network on the eastern edge of the Lake Cook Corridor while distinguishing itself within the larger open space context.

Goal 2: Enhance the Civic Triangle.
The Civic Triangle constitutes the heart of Buffalo Grove and comprises three key civic nodes: Mike Rylko Park area, the Lake Cook Corridor's eastern edge, and the western edge of the Lake Cook Corridor. The Park, situated in the center of the Lake Cook Corridor's eastern edge, will play an integral role in strengthening the identity of the Civic Triangle as a new destination for the community and beyond.

Goal 3: Capture and integrate the Urban/Suburban Dynamic inherent to the Clove's Development.
The Clove is characterized by its urban dynamics with walkability and high-density development that are supported by auto-oriented infrastructure in suburban settings. The design and programming of the Park will capitalize on and balance these unique dynamics that are inherent to the Clove development.

Goal 4: Accommodate activity and that is versatile and adaptable to variety of uses and weather.
The Park is envisioned as a civic open space that is flexible for a variety of uses all year round, serving the community and visitors alike. The versatility of the Park will be further enhanced by its unique placemaking elements.

Goal 5: Become an iconic image and landmark for the Village that aligns with the community's logo and character
The high visibility of the Park will lend itself to becoming an iconic landmark of the Village. It is anticipated that the Park's aesthetics and sense of place align with the Village's logo and character and the Park shall be designed to experience from a variety of user perspectives.

WRT ASSUMPTIONS

The following assumptions were used by WRT as a basis for the scope of work:

- Project kick-off at the end of the first quarter of 2025.
- Project budget and construction target date are currently unknown.

- Construction documentation to be completed by others (TBD) following the completion of Concept Design with WRT design oversight. The following scope of services is provided only by WRT with no other subconsultants at this time.
- The Concept Plan includes marketing level renderings, illustrative site plan, material palettes and an order of magnitude cost estimate.
- The base (survey) drawing is provided by the Village in CADD format.
- Remote Bi-weekly check-in meetings. In-person meetings are identified below.

SCOPE OF WORK

The following scope of work outlines the major tasks to be undertaken to achieve the desired outcome of the Concept Plan for the Clove Park (the Park). The scope of work is organized into four tasks:

- Task 1: Project Initiation
- Task 2: Visioning & Engagement
- Task 3: Concept Development
- Task 4: Final Concept Plan & Public Reveal

TASK 1: Project Initiation (2 weeks)

The purpose of Task 1 is to ensure that the project begins with a clear understanding of the process, schedule, and desired outcomes.

Subtask 1.1: Kick-off/Stakeholder Meeting Preparation & Base Drawing Compilation

WRT will prepare presentation materials for the kick-off/stakeholder meeting and compile base drawings (provided by the Village in CADD) as a basis for site design.
Deliverables: *Base Drawings (PDF).*

Subtask 1.2: Site Visit and Kick-off/Stakeholder Meeting #1 (Trip A)

WRT will visit the site prior to the kick-off/Stakeholder meeting. The site visit will include the Park as well as the Lake Cook Greenway (the Greenway). WRT will assess the existing conditions, site context, and opportunities and constraints that will be developed further in Task 2.
Following the site visit, WRT will conduct a project kick-off/Stakeholder meeting to discuss project strategy and schedule. Much of the meeting will be devoted to crafting a preliminary vision, goals, and objectives for the Park. Communication protocols will also be established.
Deliverables: *Meeting Agenda; Meeting Minutes; Meeting Presentation Materials (PDF).*

TASK 2: Visioning & Engagement (6 weeks)

The purpose of Task 2 is to identify the Park's amenities, as well as contextual natural and cultural resources, review available information, and assess how those resources should be incorporated into the concept development.

Subtask 2.1: Site Context Study

WRT will develop Site Context Plan of the Park in relation to the adjacent development, neighboring communities, and the Greenway, informing at different scales. This will include an analysis and inventory of the ecological, stormwater management, utility, and circulation / transportation systems as well as open space/recreation programing, landscape characteristics, and land use studies.
Deliverables: *Site Context Plan.*

Subtask 2.2: Community Engagement Materials Preparation

WRT will prepare the community engagement materials, which will include analysis diagrams of opportunities & constraints, precedent Images of potential programs, and development of thematic alternatives. Prior to the community engagement meeting, WRT will meet with the Village to review the DRAFT Power Point presentation and engagement drawings/activities, the logistics and agenda of the public meeting.
Deliverables: Community Engagement Materials.

Subtask 2.3: Stakeholder Meeting #2 (In-Person; Trip B)
WRT will pre-view the engagement materials with stakeholders, which will include Opportunities & Constraints Analysis, Program Precedents, and Thematic Alternatives.
Deliverables: Meeting Agenda; Meeting Minutes.

Subtask 2.4: Community Engagement #1 (In-Person; Trip B)
WRT will lead the engagement activities to solicit community input on Opportunities & Constraints Analysis, Program Precedents, and Thematic Alternatives.

This first public meeting will start with an introduction to the project and an overview of the information gathered during the inventory and analysis. The rest of the meeting will consist of a "brainstorming" or big ideas session focused on programming and the physical vision for the Park and what is their visual preference for the future park. The goal is to receive maximum input from the public that will help provide the ingredients to inform the development of Concept Plan in Task 3.

The Village will help provide additional personnel support, as needed, for the engagement activities. Advertising, promoting and the logistics for the community engagement meeting will be the primary responsibility of the Village with the details finalized in coordination with WRT (advertisement and rental fees, if necessary, for meeting venues are not included in the WRT project budget). Prior to each public meeting WRT will meet with the Village to review the presentations, the logistics, and the agenda of the public meeting.
Deliverables: Photographs and Summary of Community Engagement.

Subtask 2.5: SurveyMonkey Prep, Launch & Result Summary
WRT will set up an on-line survey (SurveyMonkey) to solicit feedback and input from the community. This survey will aid in determining what new programs and amenities should be offered at the Park based on the overall needs of the community. The development of the on-line survey questions will be reviewed with the Village before being posted on-line. The link to the on-line survey will be provided at the first community engagement meeting as well as on the Village's website. Results of the online survey will be shared with the Village in Task 3.1.
Deliverables: Draft and Final Survey Questionnaire; Summary of Survey Results.

TASK 3: Concept Development (5 weeks)

The purpose of Task 3 is to synthesize all the information from the preceding Tasks to provide Basis of Design for the evaluation of thematic alternatives and the development of Concept Plan.

Subtask 3.1: Stakeholder & Community Feedback Synthesis
WRT will synthetize the stakeholder and community feedback obtained through Stakeholder Meeting #2, Community Engagement #1, and the on-line survey to develop a Basis of Design to gauge Thematic Alternatives. The Basis of Design will serve as the foundation for the development of the refined Concept Plan that aligns with the project goals and expectations.
Deliverables: Basis of Design Summary.

Subtask 3.2: Draft Concept Development with Materials Palette
WRT will develop Draft Concept Plan of the Park utilizing the Basis of Design as a comprehensive framework. The Draft Concept Plan will be accompanied by Materials Palette encompassing plants,

paving, site furnishings, and other site amenities. WRT will review the DRAFT Concept Plan with the Village of Buffalo Grove via Teams virtual meeting prior to the Stakeholder meeting in Subtask 3.3.
Deliverables: Draft Concept Plan; Materials Palette.

Subtask 3.3: Stakeholder Meeting #3 (Virtual)
WRT will present Draft Concept Plan and Materials Palette to stakeholders via Teams virtual meeting.
Deliverables: Meeting Agenda; Meeting Minutes; Presentation Materials.

Subtask 3.4: Develop Refined Concept Plan
WRT will incorporate client and stakeholder feedback to develop a refined Concept Plan. The refined Concept Plan will be accompanied by Materials Palette encompassing plants, paving, site furnishings, and other site amenities. This refined Concept Plan must be approved by the Village before WRT advances to Task 4.
Deliverables: Refined Concept Plan; Materials Palette.

TASK 4: Final Concept Plan & Public Reveal (3.5 weeks)
The purpose of Task 4 is to provide the final deliverables for the Conceptual Plan for the Park. WRT will prepare an illustrative plan and renderings that locate and quantify proposed improvements as well as providing final material palette boards. WRT will prepare an order of magnitude cost estimation that will inform the next phases of the project. At the end of Task 4, WRT will attend a community celebration to reveal the final concept plan to the public.

Subtask 4.1: Marketing Images
WRT will produce an illustrative site plan, one aerial and one eye-level rendered perspectives of the final concept plan. These illustrations will explain the character, spatial relationships between the park program, forms and elements. These perspectives will be developed to support future marketing efforts by the Village.
Deliverables: (1) Illustrative Site Plan, (2) Perspective Renderings (1 aerial & 1 eye level).

Subtask 4.2: Rough Order of Magnitude Cost Estimate
WRT will prepare Rough Order of Magnitude (ROM) cost estimate of Pre-Schematic Design Set to verify the high-level construction cost.
Deliverables: Rough order of magnitude cost estimate.

Subtask 4.3: Stakeholder Meeting #4 (In-Person; Trip C)
WRT will review final deliverables of Task 4.1 through 4.3 with stakeholders.
Deliverables: Meeting Minutes

Subtask 4.4: Community Engagement #2 (In-Person; Trip C) – Public Reveal
WRT will develop presentation materials and lead the engagement activities. A public reveal can take many different forms (big presentations, large scale exterior exhibits, food trucks and performances, etc..) which can be determined at a later date, but for this proposal WRT assumes a final Power Point presentation with large scale print outs of the illustrative site plan, renderings, and material palettes. As mentioned in Task 2.4, all advertising, promotion and the logistics for the community engagement meeting will be the primary responsibility of the Village with the details finalized in coordination with the WRT (advertisement and rental fees, if necessary, for meeting venues are not included in the WRT project budget).
Deliverables: Photographs and Summary of Community Engagement.

EXCLUSIONS

The following is not included in the scope of work:

- Outline specifications.
- Civil engineering.
- Structural engineering.
- MEP engineering.
- Lighting design.
- Irrigation design.
- Public Art process
- Fountain design

SCHEDULE

CONCEPT DESIGN FOR THE CLOVE PARK

2/6/2025

		Month 1	Month 2	Month 3	Month 4	Month 5
TASK 1	**PROJECT INITIATION (2 weeks)**					
	*Award of Contract	MM/DD (TBD)				
Subtask 1.1	Kick-off/Stakeholder Meeting Preparation & Base Drawing Compilation					
Subtask 1.2	Site Visit and Kick-off/Stakeholder Meeting #1 (Trip A)	MM/DD (TBD)				
TASK 2	**VISIONING & ENGAGEMENT (6 weeks)**					
Subtask 2.1	Site Context Study					
Subtask 2.2	Community Engagement Materials Preparation					
Subtask 2.3	Stakeholder Meeting #2 (In-Person; Trip B)		MM/DD (TBD)			
Subtask 2.4	Community Engagement #1 (In-Person; Trip B)		MM/DD (TBD)			
Subtask 2.5	SurveyMonkey Prep, Launch & Result Summary (Continue into Task 3)					
TASK 3	**CONCEPT DEVELOPMENT (5 weeks)**					
Subtask 3.1	Stakeholder & Community Feedback Synthesis					
Subtask 3.2	Draft Concept Development with Materials Palette					
Subtask 3.3	Stakeholder Meeting #3 (Virtual)			MM/DD (TBD)		
Subtask 3.4	Develop Refined Concept Plan					
	*Client approval needed before moving to Task 4					
TASK 4	**FINAL CONCEPT PLAN DELIVERABLES & PUBLIC REVEAL (3.5 weeks)**					
Subtask 4.1	Marketing Images					
Subtask 4.3	Rough Order of Magnitude Cost Estimate					
Subtask 4.4	Stakeholder Meeting #4 (In-Person; Trip C)					MM/DD (TBD)
Subtask 4.5	Community Engagement #2 (In-Person; Trip C) – Public Reveal					MM/DD (TBD)

Meeting Date

Project Deliverable

EXHIBIT C. Insurance

Consultant shall procure and maintain, for the duration of the Contract and any maintenance period, insurance against claims for injuries to persons or damages to property, which may arise from or in connection with the performance of the work hereunder by the Consultant, his agents, representatives, employees or subcontractors.

A. Minimum Scope of Insurance: Coverage shall be at least as broad as:

Insurance Services Office Commercial General Liability occurrence form CG 0001 (or its equivalent) with the Village of Buffalo Grove named as additional insured on a primary and non-contributory basis. This primary, non-contributory additional insured coverage shall be confirmed through the following required policy endorsements: ISO Additional Insured Endorsement CG 20 10 or CG 20 26 and CG 20 01 04 13 (or their equivalents).

1. Insurance Service Office Business Auto Liability coverage form number CA 0001 (or its equivanlet) for any owned (if consultant owns any vehicles) hired and non-owned autos.
2. Workers' Compensation as required by the Labor Code of the State of Illinois and Employers' Liability insurance.

B. Minimum Limits of Insurance: Consultant shall maintain limits no less than:

1. Commercial General Liability: $1,000,000 per occurrence for bodily injury, personal injury and property damage. The general aggregate shall be twice the required occurrence limit. Minimum General Aggregate shall be no less than $2,000,000 or a project/contract specific aggregate of $1,000,000.
2. Business Automobile Liability: $1,000,000 combined single limit per accident for bodily injury and property damage.
3. Workers' Compensation and Employers' Liability: Workers' Compensation coverage with statutory limits and Employers' Liability limits of $500,000 per accident.

C. Deductibles and Self-Insured Retentions

Any deductibles or self-insured retentions must be declared to and approved by the Village. At the option of the Village, either: the insurer shall reduce or eliminate such deductibles or self-insured retentions as it respects the Village, its officials, agents, employees and volunteers; or the Consultant shall procure a bond guaranteeing payment of losses and related investigation, claim administration and defense expenses.

D. Other Insurance Provisions

The policies are to contain, or be endorsed to contain, the following provisions:

1. General Liability and Automobile Liability Coverages:
    a. The Village, its officials, agents, employees and volunteers are to be listed as additional insureds as respects: liability arising out of activities performed by or on behalf of the Consultant; products and completed operations of the Consultant; premises owned, leased or used by the Consultant; or automobiles owned, leased, hired or borrowed by the Consultant. The coverage shall contain no special limitations on the scope of protection afforded to the Village, its officials, agents, employees and volunteers.
2. The Consultant's insurance coverage shall be primary and non-contributory as respects the Village, its officials, agents, employees and volunteers. Any insurance or self-insurance maintained by the Village, its officials, agents, employees and volunteers shall be excess of Consultant's insurance and shall not contribute with it.
3. The Consultant's insurance shall contain a Severability of Interests/Cross Liability clause or language stating that Consultant's insurance shall apply separately to each insured against whom claim is made or suit is brought, except with respect to the limits of the insurer's liability.
4. If any commercial general liability insurance is being provided under an excess or umbrella liability policy that does not “follow form,” then the Consultant shall be required to name the Village, its officials, employees, agents and volunteers as additional insureds
5. All general liability coverages shall be provided on an occurrence policy form. Claims-made general liability policies will not be accepted.

E. All Coverages:

1. No Waiver. Under no circumstances shall the Village be deemed to have waived any of the insurance requirements of this Contract by any act or omission, including, but not limited to:
    a. Allowing work by Consultant or any subcontractor to start before receipt of Certificates of Insurance and Additional Insured Endorsements.
    b. Failure to examine, or to demand correction of any deficiency, of any Certificate of Insurance and Additional Insured Endorsement received.
2. Should any of the policies be cancelled before the expiration date thereof, notice will be delivered in accordance with the policy provisions.

F. Acceptability of Insurers

Insurance is to be placed with insurers with a Best's rating of no less than A-, VII and authorized to do business in the State of Illinois.

G. Verification of Coverage

Consultant shall furnish the Village with certificates of insurance naming the Village, its officials, agents, employees, and volunteers as additional insured's and with original endorsements, affecting coverage required herein. The certificates of insurance are to be signed by a person authorized by that insurer to bind coverage on its behalf. The certificates and endorsements are to be received and approved by the Village before any work commences. The Village reserves the right to request full certified copies of the insurance policies and endorsements.

H. Subcontractors

Consultant shall furnish separate certificates and endorsements for each subcontractor. All coverage's for subcontractors shall be subject to all of the requirements stated herein.

I. Workers' Compensation and Employers' Liability Coverage

To the extent permitted under applicable law, The insurer shall agree to waive all rights of subrogation against the Village of Buffalo Grove, its officials, employees, agents and volunteers for losses arising from work performed by Consultant for the municipality.

J. Failure to Comply

In the event the Consultant fails to obtain or maintain any insurance coverage's required under this contract, The Village may purchase such insurance coverage's and charge the expense thereof to the Consultant.

AGENDA ITEM SUMMARY

BUFFALO GROVE VILLAGE BOARD

Regular Meeting: March 17, 2025

AGENDA ITEM 9.d. O-2025-47
Ordinance Authorizing a Contract with Builders Paving, LLC for the 2025 Pavement Patching Project

Contacts

Liaison: Trustee Stein
Staff: Kyle Johnson

Staff Recommendation

Staff recommends approval.

Recommended Motion

I move to approve an Ordinance authorizing the execution of a Contract with Builders Paving, LLC for the 2025 Pavement Patching Project, pending final review by the Village Attorney.

Summary

Recommendation

Staff recommends that the Village Board award the contract to Builders Paving, LLC a price not to exceed $471,540.30 because the firm is the lowest qualified bidder for the work proposed. Due to the size and scope of the project, staff recommends a contingency fund be created and controlled by the Village in the amount of $42,867.30 (10.0% of the project cost). As bids came in below the engineers estimate Public Works staff will consult with the Village Manager prior to exceeding the low bid price of $428,673.00. This project is funded by Illinois Motor Fuel Tax Funds (MFT).

Background

The 2025 Pavement Patching Project was advertised for bids and opened on March 10, 2025, where 5 qualifying bids were received. The lowest, qualified base bid was in the amount of $334,651.00 from Builders Paving, LLC. Builders Paving, LLC also supplied a qualified alternate bid in the amount of $94,022.00, which makes the overall bid value $428,673.00. The project includes pavement patches of a two-inch depth to be constructed on various streets within the Village, helping extend the life of the overall pavement or as patches that are larger than the capabilities of Public Works Operations.

Attached is a copy of the Tabulation of Bids for the project indicating the lowest, total qualified bid of $428,673.00. Also demonstrated in the attachment is an engineer's estimate of

smart. with heart.
50 Raupp Blvd, Buffalo Grove, IL 60089 847-459-2500 vbg.org

$505,150. All work associated with this project is expected to be completed by early June. All draft contract documentation can be found here.

Strategic Alignment

Guiding Principle

Principle 3: Plan and Invest in the Future

Goal

Goal 1: Maintained effective village government: fiscally responsible and providing outstanding, responsive services

File Attachments

1. DRAFT Ordinance - 2025 Pavement Patching Award
2. Bid Recommendation & Bid Summary - Pavement Patching

smart. with heart.
50 Raupp Blvd, Buffalo Grove, IL 60089 847-459-2500 vbg.org

ORDINANCE 2025-xxx

AN ORDINANCE AUTHORIZING A CONTRACT WITH BUILDERS PAVING, LLC FOR THE 2025 PAVEMENT PATCHING PROJECT

WHEREAS the Village of Buffalo Grove is a home rule unit pursuant to the Illinois Constitution of 1970; and

WHEREAS the Village seeks to enter into a contract with Builders Paving, LLC for the 2025 Pavement Patching Project.

NOW THEREFORE BE IT ORDAINED by the President and Board of Trustees of the Village of Buffalo Grove, Cook and Lake Counties, Illinois, as follows:

SECTION 1. The foregoing recitals are hereby adopted and incorporated and made a part of this Ordinance as if fully set forth herein.

SECTION 2. The Village President is authorized to execute a contract with Builders Paving, LLC for the 2025 Pavement Patching Project at a price not to exceed $471,540.30, pending attorney review.

SECTION 3. If any section, paragraph, clause or provision of this Ordinance shall be held invalid, the invalidity thereof shall not affect any other provision of this Ordinance.

SECTION 4. This Ordinance shall be in full force and effect from and after its passage and approval and shall not be codified.

AYES: _____
NAYES: _____
ABSENT: _____
PASSED: _____, 2025
APPROVED: _____, 2025
PUBLISHED: _____, 2025

ATTEST:

_____
Janet M. Sirabian, Village Clerk

APPROVED:

_____
Eric N. Smith, Village President

DRAFT

smart. with heart.
50 Raupp Blvd, Buffalo Grove, IL 60089 847-459-2500 vbg.org

GEWALT HAMILTON ASSOCIATES, INC.
CONSULTING ENGINEERS
625 Forest Edge Drive, Vernon Hills, IL 60061
Tel 847.478.9700 ▪ Fax 847.478.9701
www.gha-engineers.com

March 11, 2025

Mr. Adam Dow
Civil Engineer II
Village of Buffalo Grove
1650 Leider Lane
Buffalo Grove, Illinois 60089

Re: 2025 Pavement Patching Project
VoBG-2025-02
Bid Results and Recommendation for Award

Dear Mr. Dow:

On Monday, March 10, 2025, bid proposals for the above referenced project were received, opened, and publicly read aloud via a Microsoft Teams video conference. This project includes hot-mix asphalt surface patching on various street segments throughout the Village limits.

As directed, the work considered was separated into a 'base bid' and an 'alternate'. Thus, two separate bid schedules were received from each contractor. Most of the proposed work was included in the base bid, and additional street segments were included in alternate 01.

Bid documents were solicited and available to contractors on the Village's website, and bids were received by five (5) contractors. As-read, the combined bid amounts ranged from $428,673.00 to $523,307.25; the Engineer's Opinion of Probable Cost (EOPC) was $505,150.00. The as-read low bid of $428,673.00 was received from Builders Paving, LLC of Hillside, Illinois. The bids for the base bid ranged from $334,651.00 to $408,237.60; the EOPC was $395,100.00. The bids for alternate 01 ranged from $94,022.00 to $115,069.75; the EOPC was $110,050.00.

Builders Paving, LLC is an IDOT prequalified firm and has the experience and means to perform the work in accordance with the plans and specifications.

We recommend that the Village Board authorize the award of a construction contract for the 2025 Pavement Patching Project to Builders Paving, LLC in the amount of $428,673.00. This includes the award of the base bid, and alternate 01.

If you have any questions or require additional information regarding the above, please do not hesitate to contact me at (847) 344-5719 or by email at ldeferville@gha-engineers.com.

Sincerely,
GEWALT HAMILTON ASSOCIATES, INC.

Lucas Deferville
Assistant Director of Construction & Survey Services

Encl.: Bid Summary

CC: Tom Wisniewski – Village of Buffalo Grove
Kyle Johnson, PE, CFM – Village of Buffalo Grove
Briget Schwab, PE – Village of Buffalo Grove
Leo Morand, PE – Gewalt Hamilton Associates, Inc.

Client: Village of Buffalo Grove

Project: 2025 Pavement Patching Project (VoBG-2025-02)

GHA Project No: 4798.083

Project Manager: Lucas Deferville

Bid Opening Date: 3/10/2025

Bid Opening Location: Virtual

				Engineer's Opinion of Probable Cost		***BID TABULATION***									
						Builders Paving, LLC Hillside, IL		*Schroeder Asphalt Services, Inc. Huntley, IL*		*Chicagoland Paving Contractors Lake Zurich, IL*		*Brothers Asphalt Paving, Inc. Addison, IL*		*Peter Baker & Son Co. Lake Bluff, IL*	
Item No.	**Description**	**Quantity**	**Unit**	**Unit Price**	**Total**	**Unit Price**	**Total**	**Unit Price**	**Total**	**Unit Price**	**Total**	**Unit Price**	**Total**	**Unit Price**	**Total**
67100100	Mobilization	1.0	LS	$20,000.00	$20,000.00	$21,718.50	$21,718.50	$2,000.00	$2,000.00	$8,730.00	$8,730.00	$4,000.00	$4,000.00	$11,850.00	$11,850.00
70102620	Traffic Control and Protection, Standard 701501	1.0	LS	$15,000.00	$15,000.00	$2,500.00	$2,500.00	$1,500.00	$1,500.00	$1,000.00	$1,000.00	$5,000.00	$5,000.00	$2,000.00	$2,000.00
-	Class D Patches, Type II, 2 Inch (Special)	3,030.0	SY	$30.00	$90,900.00	$20.25	$61,357.50	$24.25	$73,477.50	$25.00	$75,750.00	$25.00	$75,750.00	$31.65	$95,899.50
-	Class D Patches, Type III, 2 Inch (Special)	4,640.0	SY	$25.00	$116,000.00	$20.25	$93,960.00	$23.50	$109,040.00	$25.00	$116,000.00	$25.00	$116,000.00	$27.35	$126,904.00
-	Class D Patches, Type IV, 2 Inch (Special)	7,660.0	SY	$20.00	$153,200.00	$20.25	$155,115.00	$23.50	$180,010.00	$22.00	$168,520.00	$25.00	$191,500.00	$22.40	$171,584.00
			Total Base Bid:		**$395,100.00**		**$334,651.00**		**$366,027.50**		**$370,000.00**		**$392,250.00**		**$408,237.50**
67100100	Mobilization	1.0	LS	$6,000.00	$6,000.00	$4,730.75	$4,730.75	$1,500.00	$1,500.00	$4,440.00	$4,440.00	$1,000.00	$1,000.00	$3,295.00	$3,295.00
70102620	Traffic Control and Protection, Standard 701501	1.0	LS	$4,000.00	$4,000.00	$1,000.00	$1,000.00	$750.00	$750.00	$500.00	$500.00	$5,000.00	$5,000.00	$2,000.00	$2,000.00
-	Class D Patches, Type II, 2 Inch (Special)	840.0	SY	$30.00	$25,200.00	$20.75	$17,430.00	$24.25	$20,370.00	$25.00	$21,000.00	$25.00	$21,000.00	$31.60	$26,544.00
-	Class D Patches, Type III, 2 Inch (Special)	1,310.0	SY	$25.00	$32,750.00	$20.75	$27,182.50	$23.50	$30,785.00	$25.00	$32,750.00	$25.00	$32,750.00	$27.30	$35,763.00
-	Class D Patches, Type IV, 2 Inch (Special)	2,105.0	SY	$20.00	$42,100.00	$20.75	$43,678.75	$23.50	$49,467.50	$22.00	$46,310.00	$25.00	$52,625.00	$22.55	$47,467.75
			Total Alternate 01 Bid:		**$110,050.00**		**$94,022.00**		**$102,872.50**		**$105,000.00**		**$112,375.00**		**$115,069.75**
			Total Bid:		**$505,150.00**		**$428,673.00**		**$468,900.00**		**$475,000.00**		**$504,625.00**		**$523,307.25**

AGENDA ITEM SUMMARY

BUFFALO GROVE VILLAGE BOARD

Regular Meeting: March 17, 2025

AGENDA ITEM 9.e. O-2025-48
Ordinance Authorizing a Contract with Globe Construction Inc. for the 2025 Sidewalk Replacement Project

Contacts

Liaison: Trustee Stein
Staff: Briget Schwab

Staff Recommendation

Staff recommends approval.

Recommended Motion

I move to approve an Ordinance authorizing the execution of a Contract with Globe Construction Inc. for the 2025 Sidewalk Replacement Project, pending final review by the Village Attorney.

Summary

Recommendation

Staff recommends that the Village Board award the contract to Globe Construction Inc. at a price not to exceed $342,903.00 because the firm is the lowest qualified bidder for the work proposed. Due to the size and scope of the project, staff recommends a contingency fund be created and controlled by the Village in the amount of $31,173.00 (10.0% of the project cost). As bids came in below the engineers estimate Public Works staff will consult with the Village Manager prior to exceeding the low bid price of $342,903.00. This project is funded by Motor Fuel Tax Funds (MFT).

Background

The 2025 Sidewalk Replacement Project advertised for bids and opened on March 10, 2025, where five (5) qualifying bids were received. The lowest qualified base bid was in the amount of $244,710.00 from Globe Construction Inc. Globe Construction Inc. also supplied qualified alternate bids one and two in the amount of $67,020.00 and $108,575.00, respectively. Bids for alternate two were higher than anticipated, so staff will pursue funding in future budget years. The overall bid value $311,730.00 and is only inclusive of the base bid and bid alternate one. The project includes sidewalk replacement on various streets within the Village which correct deficient sidewalks. Some of these deficiencies include cracked or broken pieces, vertical displacements and depressional areas that collect and pond water.

smart. with heart.
50 Raupp Blvd, Buffalo Grove, IL 60089 847-459-2500 vbg.org

Attached is a copy of the Tabulation of Bids for the project indicating the lowest total qualified bid of $311,730.00 from Globe Construction Inc. Also demonstrated in the attachment is an engineer's estimate of $486,155.00. This project is expected to start mid-June and be completed by mid-August. All draft contract documentation can be found here.

Strategic Alignment

Guiding Principle

Principle 3: Plan and Invest in the Future

Goal

Goal 1: Maintained effective village government: fiscally responsible and providing outstanding, responsive services

File Attachments

1. DRAFT Ordinance - 2025 Sidewalk Replacement Award
2. Bid Recommendation Bid Summary - Sidewalk Improvements

smart. with heart.
50 Raupp Blvd, Buffalo Grove, IL 60089 847-459-2500 vbg.org

ORDINANCE 2025-xxx

AN ORDINANCE AUTHORIZING A CONTRACT WITH GLOBE CONSTRUCTION INC. FOR THE 2025 SIDEWALK REPLACEMENT PROJECT

WHEREAS the Village of Buffalo Grove is a home rule unit pursuant to the Illinois Constitution of 1970; and

WHEREAS the Village seeks to enter into a contract with Globe Construction Inc. for the 2025 Sidewalk Replacement Project.

NOW THEREFORE BE IT ORDAINED by the President and Board of Trustees of the Village of Buffalo Grove, Cook and Lake Counties, Illinois, as follows:

SECTION 1. The foregoing recitals are hereby adopted and incorporated and made a part of this Ordinance as if fully set forth herein.

SECTION 2. The Village President is authorized to execute a contract with Globe Construction Inc. for the 2025 Sidewalk Replacement Project at a price not to exceed $342,903, pending attorney review.

SECTION 3. If any section, paragraph, clause or provision of this Ordinance shall be held invalid, the invalidity thereof shall not affect any other provision of this Ordinance.

SECTION 4. This Ordinance shall be in full force and effect from and after its passage and approval and shall not be codified.

AYES: _____
NAYES: _____
ABSENT: _____
PASSED: _____, 2025
APPROVED: _____, 2025
PUBLISHED: _____, 2025

ATTEST:

_____
Janet M. Sirabian, Village Clerk

APPROVED:

_____
Eric N. Smith, Village President

DRAFT

smart. with heart.
50 Raupp Blvd, Buffalo Grove, IL 60089 847-459-2500 vbg.org

March 11, 2025

GEWALT HAMILTON ASSOCIATES, INC.
CONSULTING ENGINEERS
625 Forest Edge Drive, Vernon Hills, IL 60061
Tel 847.478.9700 ▪ Fax 847.478.9701
www.gha-engineers.com

Mr. Adam Dow
Civil Engineer II
Village of Buffalo Grove
1650 Leider Lane
Buffalo Grove, Illinois 60089

Re: 2025 Sidewalk Improvements Project
VoBG-2025-07
Bid Results and Recommendation for Award

Dear Mr. Dow:

On Monday, March 10, 2025, bid proposals for the above referenced project were received, opened, and publicly read aloud via a Microsoft Teams video conference. This project includes concrete sidewalk removal and replacement on various street segments throughout the Village limits.

As directed, the work considered was separated into a 'base bid' and two 'alternates'. Thus, three separate bid schedules were received from each contractor. Most of the proposed work was included in the base bid, and additional street segments were included in both alternate 01 and alternate 02.

Bid documents were solicited and available to contractors on the Village's website, and bids were received by five (5) contractors. As-read, the combined bid amounts ranged from $419,205.00 to $851,507.00; the Engineer's Opinion of Probable Cost (EOPC) was $651,355.00. The as-read low bid of $419,205.00 was received from Suburban Concrete Inc. of Mundelein, Illinois. The bids for the base bid ranged from $243,530.00 to $477,996.00; the EOPC was $386,185.00. The bids for alternate 01 ranged from $67,020.00 to $125,223.00; the EOPC was $99,970.00. The bids for alternate 02 ranged from $106,575.00 to $248,288.00; the EOPC was $165,200.00.

Based on the Village's budget, we recommend awarding the base bid and alternate 01. The as-read low bid for these two was Globe Construction, Inc. in the amount of $311,730.00.

Globe Construction Inc. is an IDOT prequalified firm and has the experience and means to perform the work in accordance with the plans and specifications.

We recommend that the Village Board authorize the award of a construction contract for the 2025 Sidewalk Improvements Project to Globe Construction, Inc. in the amount of $311,730.00. This includes the award of the base bid, and alternate 01.

If you have any questions or require additional information regarding the above, please do not hesitate to contact me at (847) 344-5719 or by email at ldeferville@gha-engineers.com.

Sincerely,
GEWALT HAMILTON ASSOCIATES, INC.

Lucas Deferville
Assistant Director of Construction & Survey Services

Encl.: Bid Summary

CC: Tom Wisniewski – Village of Buffalo Grove
Kyle Johnson, PE, CFM – Village of Buffalo Grove
Briget Schwab, PE – Village of Buffalo Grove
Leo Morand, PE – Gewalt Hamilton Associates, Inc.

Client: Village of Buffalo Grove

Project: 2025 Sidewalk Improvements Project (VoBG-2025-07)

GHA Project No: 4798.083

Project Manager: Lucas Deferville

Bid Opening Date: 3/10/2025

Bid Opening Location: Virtual

				Engineer's Opinion of Probable Cost		***BID TABULATION***									
						Suburban Concrete Inc. Mundelein, IL		*Globe Construction, Inc. Addison, IL*		*Schroeder & Schroeder Inc. Skokie, IL*		*Everlast Blacktop Inc. Elgin, IL*		*Alliance Contractors, Inc. Woodstock, IL*	
Item No.	**Description**	**Quantity**	**Unit**	**Unit Price**	**Total**	**Unit Price**	**Total**	**Unit Price**	**Total**	**Unit Price**	**Total**	**Unit Price**	**Total**	**Unit Price**	**Total**
20101200	Tree Root Pruning	118.0	EA	$135.00	$15,930.00	$110.00	$12,980.00	$120.00	$14,160.00	$75.00	$8,850.00	$120.00	$14,160.00	$85.00	$10,030.00
35101400	Aggregate Base Course, Type B	80.0	TN	$30.00	$2,400.00	$30.00	$2,400.00	$32.00	$2,560.00	$1.00	$80.00	$32.00	$2,560.00	$25.00	$2,000.00
42300200	Portland Cement Concrete Driveway Pavement, 6 Inch	340.0	SY	$90.00	$30,600.00	$80.00	$27,200.00	$81.00	$27,540.00	$90.00	$30,600.00	$128.00	$43,520.00	$110.25	$37,485.00
42400200	Portland Cement Concrete Sidewalk 5 Inch	16,600.0	SF	$13.00	$215,800.00	$8.00	$132,800.00	$9.00	$149,400.00	$11.00	$182,600.00	$12.45	$206,670.00	$16.80	$278,880.00
44000200	Driveway Pavement Removal	400.0	SY	$15.00	$6,000.00	$20.00	$8,000.00	$18.00	$7,200.00	$15.00	$6,000.00	$18.00	$7,200.00	$30.00	$12,000.00
44000500	Combination Curb and Gutter Removal	50.0	FT	$12.50	$625.00	$6.00	$300.00	$20.00	$1,000.00	$10.00	$500.00	$10.00	$500.00	$20.00	$1,000.00
44000600	Sidewalk Removal	16,600.0	SF	$2.55	$42,330.00	$2.00	$33,200.00	$1.00	$16,600.00	$1.50	$24,900.00	$1.80	$29,880.00	$4.00	$66,400.00
67100100	Mobilization	1.0	LS	$20,000.00	$20,000.00	$2,000.00	$2,000.00	$2,000.00	$2,000.00	$3,500.00	$3,500.00	$12,716.80	$12,716.80	$29,000.00	$29,000.00
70102620	Traffic Control and Protection, Standard 701501	1.0	LS	$12,750.00	$12,750.00	$2,000.00	$2,000.00	$1,000.00	$1,000.00	$1.00	$1.00	$100.00	$100.00	$7,200.00	$7,200.00
70102640	Traffic Control and Protection, Standard 701801	1.0	LS	$12,750.00	$12,750.00	$2,000.00	$2,000.00	$1,000.00	$1,000.00	$3,619.00	$3,619.00	$100.00	$100.00	$100.00	$100.00
Z0004510	Hot-Mix Asphalt Driveway Pavement, 3"	80.0	SY	$150.00	$12,000.00	$80.00	$6,400.00	$85.00	$6,800.00	$60.00	$4,800.00	$36.00	$2,880.00	$116.95	$9,356.00
-	General Landscape Restoration (Special)	850.0	SY	$15.00	$12,750.00	$15.00	$12,750.00	$17.00	$14,450.00	$5.00	$4,250.00	$7.00	$5,950.00	$21.50	$18,275.00
-	Combination Concrete Curb and Gutter, Type Varies (Abutting Existing Pavement)	50.0	FT	$45.00	$2,250.00	$30.00	$1,500.00	$20.00	$1,000.00	$100.00	$5,000.00	$88.00	$4,400.00	$125.40	$6,270.00
			Total Base Bid:		**$386,185.00**		**$243,530.00**		**$244,710.00**		**$274,700.00**		**$330,636.80**		**$477,996.00**
20101200	Tree Root Pruning	50.0	EA	$135.00	$6,750.00	$110.00	$5,500.00	$120.00	$6,000.00	$75.00	$3,750.00	$120.00	$6,000.00	$85.00	$4,250.00
35101400	Aggregate Base Course, Type B	20.0	TN	$30.00	$600.00	$30.00	$600.00	$32.00	$640.00	$1.00	$20.00	$32.00	$640.00	$25.00	$500.00
42300200	Portland Cement Concrete Driveway Pavement, 6 Inch	80.0	SY	$90.00	$7,200.00	$80.00	$6,400.00	$81.00	$6,480.00	$90.00	$7,200.00	$129.00	$10,320.00	$110.25	$8,820.00
42400200	Portland Cement Concrete Sidewalk 5 Inch	4,400.0	SF	$13.00	$57,200.00	$8.00	$35,200.00	$9.00	$39,600.00	$11.00	$48,400.00	$12.80	$56,320.00	$11.40	$50,160.00
44000200	Driveway Pavement Removal	100.0	SY	$15.00	$1,500.00	$20.00	$2,000.00	$18.00	$1,800.00	$15.00	$1,500.00	$18.00	$1,800.00	$30.00	$3,000.00
44000600	Sidewalk Removal	4,400.0	SF	$2.55	$11,220.00	$2.00	$8,800.00	$1.00	$4,400.00	$1.50	$6,600.00	$1.90	$8,360.00	$4.00	$17,600.00
67100100	Mobilization	1.0	LS	$5,500.00	$5,500.00	$2,000.00	$2,000.00	$1,000.00	$1,000.00	$3,500.00	$3,500.00	$3,465.68	$3,465.68	$32,354.00	$32,354.00
70102620	Traffic Control and Protection, Standard 701501	1.0	LS	$2,000.00	$2,000.00	$2,000.00	$2,000.00	$1,000.00	$1,000.00	$1.00	$1.00	$1.00	$1.00	$1,800.00	$1,800.00
70102640	Traffic Control and Protection, Standard 701801	1.0	LS	$2,000.00	$2,000.00	$2,000.00	$2,000.00	$1,000.00	$1,000.00	$999.00	$999.00	$1.00	$1.00	$100.00	$100.00
Z0004510	Hot-Mix Asphalt Driveway Pavement, 3"	20.0	SY	$150.00	$3,000.00	$80.00	$1,600.00	$85.00	$1,700.00	$60.00	$1,200.00	$80.00	$1,600.00	$116.95	$2,339.00
-	General Landscape Restoration (Special)	200.0	SY	$15.00	$3,000.00	$15.00	$3,000.00	$17.00	$3,400.00	$5.00	$1,000.00	$8.00	$1,600.00	$21.50	$4,300.00
			Total Alternate 01 Bid:		**$99,970.00**		**$69,100.00**		**$67,020.00**		**$74,170.00**		**$90,107.68**		**$125,223.00**
20101200	Tree Root Pruning	18.0	EA	$135.00	$2,430.00	$110.00	$1,980.00	$120.00	$2,160.00	$75.00	$1,350.00	$120.00	$2,160.00	$85.00	$1,530.00
35101400	Aggregate Base Course, Type B	75.0	TN	$30.00	$2,250.00	$30.00	$2,250.00	$32.00	$2,400.00	$1.00	$75.00	$32.00	$2,400.00	$25.00	$1,875.00
42400200	Portland Cement Concrete Sidewalk 5 Inch	8,800.0	SF	$13.00	$114,400.00	$8.00	$70,400.00	$9.00	$79,200.00	$11.00	$96,800.00	$12.45	$109,560.00	$14.74	$129,712.00
44000600	Sidewalk Removal	5,500.0	SF	$2.55	$14,025.00	$2.00	$11,000.00	$1.00	$5,500.00	$1.50	$8,250.00	$1.80	$9,900.00	$4.00	$22,000.00
67100100	Mobilization	1.0	LS	$9,000.00	$9,000.00	$2,000.00	$2,000.00	$1,000.00	$1,000.00	$3,500.00	$3,500.00	$4,993.68	$4,993.68	$65,726.00	$65,726.00
70102620	Traffic Control and Protection, Standard 701501	1.0	LS	$3,000.00	$3,000.00	$2,000.00	$2,000.00	$750.00	$750.00	$1.00	$1.00	$1.00	$1.00	$3,000.00	$3,000.00
70102640	Traffic Control and Protection, Standard 701801	1.0	LS	$3,000.00	$3,000.00	$2,000.00	$2,000.00	$750.00	$750.00	$2,589.00	$2,589.00	$1.00	$1.00	$100.00	$100.00
-	General Landscape Restoration (Special)	735.0	SY	$15.00	$11,025.00	$15.00	$11,025.00	$17.00	$12,495.00	$5.00	$3,675.00	$8.00	$5,880.00	$21.50	$15,802.50
-	Detectable Warnings (Furnished by Others)	96.0	SF	$45.00	$4,320.00	$20.00	$1,920.00	$20.00	$1,920.00	$10.00	$960.00	$40.00	$3,840.00	$65.00	$6,240.00
-	Curb Grinding	50.0	FT	$35.00	$1,750.00	$40.00	$2,000.00	$48.00	$2,400.00	$150.00	$7,500.00	$20.00	$1,000.00	$46.05	$2,302.50
			Total Alternate 02 Bid:		**$165,200.00**		**$106,575.00**		**$108,575.00**		**$124,700.00**		**$139,735.68**		**$248,288.00**
			Total Bid:		**$651,355.00**		**$419,205.00**		**$420,305.00**		**$473,570.00**		**$560,480.16**		**$851,507.00**

AGENDA ITEM SUMMARY

BUFFALO GROVE VILLAGE BOARD

Regular Meeting: March 17, 2025

AGENDA ITEM 9.f. O-2025-49
Ordinance Authorizing a Contract with Integral Power Atlantic, LLC for Streetlight Maintenance

Contacts

Liaison: Trustee Stein
Staff: James Warnstedt

Staff Recommendation

Staff recommends approval.

Recommended Motion

I move to approve an Ordinance authorizing the execution of a Contract with Integral Power Atlantic, LLC for Streetlight Maintenance, in an amount not to exceed $308,208.05 per year, pending final review by the Village Attorney.

Summary

Recommendation

Staff recommends that the Village Board authorize the Village Manager to execute a contract with Integral Power Atlantic, LLC for Streetlight Maintenance in an amount not to exceed $308,208.05 per year, pending final review and approval of the contract by the Village Attorney.

Background

For over two decades, our annual streetlight maintenance work has been completed by Aldridge Electrical Contractors. Our existing contract with Aldridge expires in 2025, and they did not choose to extend the contract nor bid on the continuation of these services for the Village of Buffalo Grove, as they no longer perform this type of work in our area. This work includes the annual inspection and relamping of streetlights throughout a designated portion of our community, emergency outages or cable fault repairs, reported issues with streetlights, light pole maintenance, replacement and other issues as needed.

In February of 2025, staff led a bid for annual streetlight maintenance. Bids were opened on February 20, 2025, and were received from the following companies: Integral Power Atlantic, LLC and H&H Electric. A copy of the bid tab is attached for reference. Integral Power Atlantic, LLC is the lowest responsive and responsible bidder.

smart. with heart.
50 Raupp Blvd, Buffalo Grove, IL 60089 847-459-2500 vbg.org

Public Works staff have reviewed the contract documents, performed an extensive reference check and met with a team from Integral Power Atlantic, LLC to go over expectations, answer questions and discuss workflow and processing of completed work. Public Works staff are confident that Integral Power Atlantic, LLC is qualified to perform this work for the Village of Buffalo Grove and meet the expectations that we have for this contract. The initial term of this contract extends from the date of award to December 31, 2026, with three (3) possible one (1) year extensions.

Strategic Alignment

Guiding Principle

Principle 3: Plan and Invest in the Future

Goal

Goal 1: Maintained effective village government: fiscally responsible and providing outstanding, responsive services

File Attachments

1. Streetlight Ordinance
2. Streetlight BidTab-2025 Final
3. STREET LIGHT MAINTENANCE - Contract

smart. with heart.
50 Raupp Blvd, Buffalo Grove, IL 60089 847-459-2500 vbg.org

ORDINANCE 2025-xxx

AN ORDINANCE AUTHORIZING EXECUTION OF A CONTRACT WITH INTEGRAL POWER ATLANTIC, LLC FOR STREET LIGHT MAINTENANCE SERVICES

WHEREAS the Village of Buffalo Grove is a home rule unit pursuant to the Illinois Constitution of 1970; and

WHEREAS the Village sought out companies qualified to provide the requested services and materials; and

WHEREAS the Village engaged in a competitive procurement process to obtain the best value for money.

NOW THEREFORE BE IT ORDAINED by the President and Board of Trustees of the Village of Buffalo Grove, Cook and Lake Counties, Illinois, as follows:

SECTION 1. The foregoing recitals are hereby adopted and incorporated and made a part of this Ordinance as if fully set forth herein.

SECTION 2. The Village Manager is authorized to execute a contract with Integral Power Atlantic, LLC for Street Light Maintenance services in an amount not to exceed $308,208.05 per year, pending final review and approval by the Village Attorney.

SECTION 3. If any section, paragraph, clause or provision of this Ordinance shall be held invalid, the invalidity thereof shall not affect any other provision of this Ordinance.

SECTION 4. This Ordinance shall be in full force and effect from and after its passage and approval and shall not be codified.

AYES: _____
NAYES: _____
ABSENT: _____
PASSED: _____, 2025
APPROVED: _____, 2025
PUBLISHED: _____, 2025

ATTEST:

_____
Janet M. Sirabian, Village Clerk

APPROVED:

_____
Eric N. Smith, Village President

DRAFT

smart. with heart.
50 Raupp Blvd, Buffalo Grove, IL 60089 847-459-2500 vbg.org

Streetlighting Maintenance Bid Tab February 20, 2025 9:00AM

			H&H Electric. Bid		Integral Power Atlantic. Bid	
Description	**Unit**	**Estimated Quantity**	**Unit Cost**	**Total Cost**	**Unit Cost**	**Total Cost**
LABOR						
1. Journeyman (x 1.0)	Per hour	500	$127.35	$63,675.00	$132.63	$66,315.00
1.a Journeyman Overtime (x 1.5)	Per hour	25	$191.02	$4,775.50	$198.95	$4,973.75
1.b Journeyman Doubletime (x 2.0)	Per hour	15	$254.70	$3,820.50	$265.26	$3,978.90
	SUB TOTAL - LABOR			**$72,271.00**		**$75,267.65**
EQUIPMENT						
2. Utility truck	Per hour	150	$50.76	$7,614.00	$26.80	$4,020.00
3. Pole Set truck	Per hour	100	$178.45	$17,845.00	$55.23	$5,523.00
4. Aerial truck	Per hour	275	$154.32	$42,438.00	$50.00	$13,750.00
5. Backhoe	Per hour	16	$1.00	$16.00	$26.80	$428.80
6. Auger	Per hour	10	$1.00	$10.00	$55.23	$552.30
7. Trencher	Per hour	10	$1.00	$10.00	$46.50	$465.00
8. Directional Boring Rig	Per hour	10	$254.34	$2,543.40	$108.00	$1,080.00
9. Arrow Board truck / trailer	Per hour	100	$19.32	$1,932.00	$35.47	$3,547.00
	SUB TOTAL - EQUIPMENT			**$72,408.40**		**$29,366.10**
MATERIALS						
10. 70W HPS Lamp	Each	5	$17.71	$88.55	$24.60	$123.00
11. 100W HPS Lamp	Each	25	$17.71	$442.75	$21.06	$526.50
12. 250W HPS Lamp	Each	100	$17.71	$1,771.00	$13.16	$1,316.00
13. 310W HPS Lamp	Each	5	$17.71	$88.55	$52.66	$263.30
14. 400W HPS Lamp	Each	5	$17.71	$88.55	$52.66	$263.30
15. Photo Cell	Each	100	$31.62	$3,162.00	$15.72	$1,572.00
16. Igniter	Each	5	$63.24	$316.20	$22.22	$111.10
17. HPS Ballast	Each	100	$126.70	$12,670.00	$145.90	$14,590.00
18. Fuse Holder	Each	100	$77.42	$7,742.00	$8.75	$875.00
19. Fuse	Each	100	$12.47	$1,247.00	$2.44	$244.00
20. Leotek EC1-6-M-MV-NW-2-530-DB	Each	5	$0.01	$0.05	$2.84	$14.20
21. LITHONIA KAD 70S R3TB	Each	5	$0.01	$0.05	$7.54	$37.70
22. LITHONIA KAD 100S R3TB	Each	5	$0.01	$0.05	$7.54	$37.70
23. LITHONIA KAD 250S R3TB	Each	5	$696.78	$3,483.90	$7.87	$39.35
24. LITHONIA KAD 320S R3TB	Each	5	$0.01	$0.05	$1,028.00	$5,140.00
25. LITHONIA KAD 400S R3TB	Each	5	$920.71	$4,603.55	$1,040.00	$5,200.00
26. HOLOPHAN ATB2-P601 LED Fixture	Each	10	$902.63	$9,026.30	$400.00	$4,000.00
27. Centrecon MEO 7 Concrete Pole, Type A	Each	5	$3,217.18	$16,085.90	$3,497.00	$17,485.00
28. Centrecon MEO 8.5 Concrete Pole, Type B	Each	5	$3,608.42	$18,042.10	$3,895.00	$19,475.00
29. Funk-Linko Corten Pole w/Base Cover (35 foot – Single Davit)	Each	5	$7,898.97	$39,494.85	$1,567.00	$7,835.00
30. Funk-Linko Corten Pole w/Base Cover (40 foot – Twin Davit)	Each	5	$7,946.97	$39,734.85	$130.00	$650.00
31. Funk-Linko Corten Pole w/Base Cover (34.5 foot – Twin Davit)	Each	5	$7,692.45	$38,462.25	$130.00	$650.00
32. Pole Numbering Per IDOT Standards with Plaque and hardware	Each	5	$32.25	$161.25	$49.33	$246.65
33. Fixture Numbering Per Village Standards	Each	10	$5.38	$53.80	$18.50	$185.00
34. Aluminum Davit Arm – (8 foot)	Each	5	$690.85	$3,454.25	$691.00	$3,455.00
35. Full-height Corten Base Cover	Each	10	$805.75	$8,057.50	$548.00	$5,480.00
36. Aluminum Skirt Replacement	Each	5	$74.18	$370.90	$85.00	$425.00
37. Breakaway Couplings (Set of 4) for Corten Pole	Each	20	$749.03	$14,980.60	$444.00	$8,880.00
38. Concrete Pole Foundation, 24-inch Diameter	Per foot	5	$1,605.22	$8,026.10	$200.00	$1,000.00
39. Concrete Foundation Extender	Each	5	$107.50	$537.50	$410.00	$2,050.00
40. #6 RHH, RHW, USE-XLP, 600V	Per foot	500	$1.15	$575.00	$1.40	$700.00
41. #8 RHH, RHW, USE-XLP, 600V	Per foot	1500	$0.80	$1,200.00	$0.88	$1,320.00
42. 2-inch GRC Conduit	Per foot	30	$9.19	$275.70	$13.23	$396.90
43. 2-inch IMC Conduit	Per foot	30	$5.27	$158.10	$7.61	$228.30
44. 2-inch Schedule 80 PVC Conduit	Per foot	30	$2.53	$75.90	$2.31	$69.30
45. 3M Scotchcast Splicing Kit	Each	30	$47.35	$1,420.50	$78.00	$2,340.00
	SUB TOTAL - MATERIALS			**$235,897.60**		**$107,224.30**
INSPECT/RELAMP						
46. Unit price to inspect street lights/pole	Each	600	$91.59	$54,954.00	$101.00	$60,600.00
47. Unit price to re-lamp street lights	Each	250	$91.59	$22,897.50	$143.00	$35,750.00
	INSPECT/RELAMP			**$77,851.50**		**$96,350.00**
	Sub Total – Labor			$72,271.00		$75,267.65
	Sub Total – Equipment			$72,408.40		$29,366.10
	Sub Total – Materials			$235,897.60		$107,224.30
	Sub Total – inspect/relamp			$77,851.50		$96,350.00
For Full Contract Term Per Year:				**$458,428.50**		**$308,208.05**

STREET LIGHT MAINTENANCE CONTRACT

Street Light Maintenance Contract (the "**Contract**") is entered between the Village of Buffalo Grove (hereinafter the "**Village**" or "**Owner**"), an Illinois home-rule unit of government, and Integral Power Atlantic an [LLC] (hereinafter the "**Contractor**") on this 18 day of March, 2025 (the "**Effective Date**"). The Village and the Contractor are hereinafter sometimes collectively referred to as the "**Parties**" and individually as a "**Party**".

RECITALS

WHEREAS, the Village has solicited bids for the Work (defined below), Contractor has submitted a bid for the Work and Village has selected Contractor for the Work based on their bid; and

WHEREAS, the Contractor wishes to enter into this Contract with the Village and the Village wishes to enter into this Contract with the Contractor for the Work;

NOW THEREFORE, for and in consideration of the mutual covenants and promises herein contained, the adequacy and sufficiency of which are hereby acknowledged by the Parties, it is agreed as follows:

ARTICLE I - WORK TO BE DONE BY THE CONTRACTOR

The Village does hereby hire and contract with the Contractor to provide all the labor, equipment, materials and/or services described more thoroughly on Contract **Exhibit A** (the "**Work**") which is incorporated into the Contract by this reference.

ARTICLE II - CONTRACT DOCUMENTS

The following exhibits are attached hereto and incorporated herein by this reference:

Contract Exhibit A – Description of the Work
Contract Exhibit B – Schedule of Prices
Contract Exhibit C – Performance and Payment Bond
Contract Exhibit D – Partial Lien Waiver
Contract Exhibit E – Final Lien Waiver

If any term or provision of this Contract shall conflict with any term or provision of the exhibits referenced above, the terms and provisions of the exhibit shall control.

ARTICLE III - CONTRACT AMOUNT

The Village agrees to pay the Contractor for the proper and timely performance of the Work in strict accordance with this Contract as detailed in **Contract Exhibit B (**the **"Schedule of Prices")** Unless explicitly provided otherwise in this Contract, the detailed sums shall be the full and exclusive compensation owed to the Contractor for the Work; and Contractor may not seek additional payments from the Village.

Prices throughout the initial term of the contract shall reflect the Contractor's response to the Bid. For subsequent terms, requests for increases of unit prices shall not exceed the CPI-All Urban Consumers, Chicago or 3% whichever is less. Written requests for price revisions after the initial term shall be submitted ninety (90) days in advance. Requests shall be based upon and include documentation of the actual change in the cost of the components involved in the contract and shall not include overhead or profit.

The Village of Buffalo Grove reserves the right to reject a proposed price increase and terminate the Contract.

ARTICLE IV – APPLICATION FOR PAYMENT

The Contractor shall be paid at most once a month and only after providing the Village the following:

1. An executed and notarized Contractor's Sworn Statement in a form similar to AIA G702 or AIA G703;
2. Either a partial or final lien waiver from every subcontractor, sub-subcontractor, or materialman in substantially the same form as attached here as **Contract Exhibit D** and **Contract Exhibit E**;
3. Certified payroll necessary for the Prevailing Wage Act; and

All payments under this Contract must be approved by the Village's Board at regularly scheduled meetings. The Village reserves the right to request any receipts, invoices, proof of payments as the Village, in its sole discretion, may deem necessary to justify the payment requested *prior* to paying the requested payment. The Contractor shall furnish with his final application for payment a Final Lien Waiver from itself and, if not already provided, from every subcontractor and materialman of the Work.

The Contractor acknowledges that the Village is a unit of local government and that all payments under the Contract are subject to the Local Government Prompt Payment Act, 50 ILCS 505 et seq. To that extent, the Village shall have forty-five calendar (45) days from receipt of a bill or invoice to pay the same before it is considered late under the Contract. Interest, if any, charged for any late payments will be subject to the interest rate caps specified in the Prompt Payment Act.

ARTICLE V – CONTRACT TIME

Term. The Village will enter into a contract from the date of award to December 31, 2026 with three (3) possible one (1) year extensions. At the end of the contract term, The Village of Buffalo Grove reserves the right to extend this contract for a period of up to sixty (60) calendar days for the purpose of securing a new contract.

Termination of Contract. The Contract may be terminated, in whole or in part, by either party if the other party substantially fails to fulfill its obligations under the Contract through no fault of the terminating party; or the Village may terminate the Contract, in whole or in part, for its convenience. However, no such termination may be effected unless the terminating party gives the other party: (1) not less than thirty (30) calendar days written notice by certified mail of intent to terminate, and (2) an opportunity for a meeting with the terminating party before termination.

ARTICLE VI – PERFORMANCE and PAYMENT BOND

The Contractor shall provide the Village with a performance and payment bond in substantially the same form as on **Contract Exhibit C** (the "**Performance and Payment Bond**") prior to Contractor beginning any Work and within 15 calendar days of the Notice of Award sent to the Contractor.

ARTICLE VII – ACCIDENT PREVENTION

The Contractor shall exercise every precaution at all times to protect itself, the property of the Village and the property of others. The safety provision of all applicable laws and ordinances shall be strictly observed by the Contractor at all times. Any practice deemed hazardous or dangerous by the Director of Public Works or his authorized representatives shall be immediately discontinued by the Contractor upon receipt of instructions from the Director of Public Works or his authorized representatives. To the fullest extent permitted by law, the Contractor shall be solely responsible for all safety-related matters.

ARTICLE VIII – INDEMNIFICATION

To the fullest extent permitted by law, the Contractor agrees to defend, pay on behalf of, indemnify, and hold harmless the Village, its elected and appointed officials, agents, employees and volunteers and others working on behalf of the Village against any and all claims, demands, suits or loss, including all costs connected therewith, and for any damages which may be asserted, claimed or recovered against or from the Village, its elected and appointed officials, agents, employees and volunteers and others working on behalf of the Village, by reason of personal injury, including bodily injury and death, and/or property damage, whether damage to property of the Village or of a third party, including loss of use thereof, which arises out of or is in any way connected or associated with the Contract and the Work.

ARTICLE IX – CONTRACTORS INSURANCE

Contractor shall procure and maintain, for the duration of the Contract and any maintenance period, insurance against claims for injuries to persons or damages to property, which may arise from or in connection with the performance of the work hereunder by the Contractor, his agents, representatives, employees or subcontractors.

A. Minimum Scope of Insurance: Coverage shall be at least as broad as:

Insurance Services Office Commercial General Liability occurrence form CG 0001 with the Village of Buffalo Grove named as additional insured on a primary and non-contributory basis. This primary, non-contributory additional insured coverage shall be confirmed through the following required policy endorsements: ISO Additional Insured Endorsement CG 20 10 or CG 20 26 and CG 20 01 04 13

1. Insurance Services Office Commercial General Liability occurrence form CG 0001 with the Village named as additional insured, on a form at least as broad as the ISO Additional Insured Endorsement CG 2010 and CG 2026
2. Insurance Service Office Business Auto Liability coverage form number CA 0001, Symbol 01 "Any Auto."
3. Workers' Compensation as required by the Labor Code of the State of Illinois and Employers' Liability insurance.

B. Minimum Limits of Insurance: Contractor shall maintain limits no less than:

1. Commercial General Liability: $1,000,000 combined single limit per occurrence for bodily injury, personal injury and property damage. The general aggregate shall be twice the required occurrence limit. Minimum General Aggregate shall be no less than $2,000,000 or a project/contract specific aggregate of $1,000,000.
2. Business Automobile Liability: $1,000,000 combined single limit per accident for bodily injury and property damage.
3. Workers' Compensation and Employers' Liability: Workers' Compensation coverage with statutory limits and Employers' Liability limits of $500,000 per accident.

C. Deductibles and Self-Insured Retentions

Any deductibles or self-insured retentions must be declared to and approved by the Village. At the option of the Village, either: the insurer shall reduce or eliminate such deductibles or self-insured retentions as it respects the Village, its officials, agents, employees and volunteers; or the Contractor shall procure a bond guaranteeing payment of losses and related investigation, claim administration and defense expenses.

D. Other Insurance Provisions

The policies are to contain, or be endorsed to contain, the following provisions:

1. General Liability and Automobile Liability Coverages:
    a. The Village, its officials, agents, employees and volunteers are to be covered as insureds as respects: liability arising out of activities performed by or on behalf of the Contractor; products and completed operations of the Contractor; premises owned, leased or used by the Contractor; or automobiles owned, leased, hired or borrowed by the Contractor. The coverage shall contain no special limitations on the scope of protection afforded to the Village, its officials, agents, employees and volunteers.
2. The Contractor's insurance coverage shall be primary and non-contributory as respects the Village, its officials, agents, employees and volunteers. Any insurance or self-insurance maintained by the Village, its officials, agents, employees and volunteers shall be excess of Contractor's insurance and shall not contribute with it.
3. Any failure to comply with reporting provisions of the policies shall not affect coverage provided to the Village, its officials, agents, employees and volunteers.
4. The Contractor's insurance shall contain a Severability of Interests/Cross Liability clause or language stating that Contractor's insurance shall apply separately to each insured against whom claim is made or suit is brought, except with respect to the limits of the insurer's liability.
5. If any commercial general liability insurance is being provided under an excess or umbrella liability policy that does not “follow form,” then the Contractor shall be required to name the Village, its officials, employees, agents and volunteers as additional insureds
6. All general liability coverages shall be provided on an occurrence policy form. Claims-made general liability policies will not be accepted.
7. The contractor and all subcontractors hereby agree to waive any limitation as to the amount of contribution recoverable against them by the Village. This specifically includes any limitation imposed by any state statute, regulation, or case law including any Workers’ Compensation Act provision that applies a limitation to the amount recoverable in contribution such as Kotecki v. Cyclops Welding

E. All Coverages:

1. No Waiver. Under no circumstances shall the Village be deemed to have waived any of the insurance requirements of this Contract by any act or omission, including, but not limited to:
    a. Allowing work by Contractor or any subcontractor to start before receipt of Certificates of Insurance and Additional Insured Endorsements.

b. Failure to examine, or to demand correction of any deficiency, of any Certificate of Insurance and Additional Insured Endorsement received.

2. Each insurance policy required shall have the Village expressly endorsed onto the policy as a Cancellation Notice Recipient. Should any of the policies be cancelled before the expiration date thereof, notice will be delivered in accordance with the policy provisions.

F. Acceptability of Insurers

Insurance is to be placed with insurers with a Best's rating of no less than A-, VII and licensed to do business in the State of Illinois.

G. Verification of Coverage

Contractor shall furnish the Village with certificates of insurance naming the Village, its officials, agents, employees, and volunteers as additional insured's and with original endorsements, affecting coverage required herein. The certificates and endorsements for each insurance policy are to be signed by a person authorized by that insurer to bind coverage on its behalf. The certificates and endorsements are to be received and approved by the Village before any work commences. The Village reserves the right to request full certified copies of the insurance policies and endorsements.

H. Subcontractors

Contractor shall include all subcontractors as insureds under its policies or shall furnish separate certificates and endorsements for each subcontractor. All coverage for subcontractors shall be subject to all of the requirements stated herein.

I. Assumption of Liability

The contractor assumes liability for all injury to or death of any person or persons including employees of the contractor, any subcontractor, any supplier or any other person and assumes liability for all damage to property sustained by any person or persons occasioned by or in any way arising out of any work performed pursuant to the Contract.

J. Workers' Compensation and Employers' Liability Coverage

The insurer shall agree to waive all rights of subrogation against the Village of Buffalo Grove, its officials, employees, agents and volunteers for losses arising from work performed by Contractor for the municipality.

K. Failure to Comply

In the event the Contractor fails to obtain or maintain any insurance coverage required under this contract, The Village may purchase such insurance coverage's and charge the expense thereof to the Contractor.

ARTICLE X – CERTIFICATE OF AUTHORITY AND SURETY CERTIFICATE

The Contractor shall furnish the Village with a current Certificate of Authority or Surety Certificate issued by the Illinois Department of Insurance for the bonding company and insurance company they are using. In lieu of a Certificate of Authority of Surety Certificate, the Contractor may provide certificate of good standing from the Illinois Department of Insurance's website.

ARTICLE XI – COPYRIGHTS AND LICENSES

The Contractor agrees that all documents of any kind whatsoever, and in whatever medium expressed, prepared by the Contractor and the Contractor's consultants in connection with the Work (collectively, the "**Documents**") or otherwise pursuant to this Contract and all rights therein (including trademarks, trade names, rights or use, copyrights and/or other proprietary rights) shall be and remain the sole property of the Village (regardless of whether the Village or the Contractor terminates this Contract for any reason whatsoever). The Contractor hereby agrees that the Documents are or shall be deemed to be "Works for Hire" within the meaning of Section 101 of the Copyright Act, and the Contractor hereby assigns to the Village all right, title and interest therein. Notwithstanding, the Contractor shall indemnify and hold harmless the Village, its appointed and elected officials, employees, agents and volunteers from and against all claims, damages, losses, and expenses (including attorneys' fees and court and arbitration costs) arising out of any infringement of patent rights or copyrights incident to the Documents and the Work.

ARTICLE XII – NOTICE

All notices, demands, requests, consents, approvals and other communications required or permitted to be given hereunder (a "**Notice**") shall be in writing and shall be deemed effective three (3) business days after mailing if mailed by certified mail with return receipt requested and immediately if served personally, and shall be addressed to the following:

IF TO THE VILLAGE:	Village of Buffalo Grove 50 Raupp Blvd Buffalo Grove, IL 60089 mskibbe@vbg.org ATTN: Director of Public Works
WITH COPIES TO:	Cc: pbrankin@schainbanks.com Cc:tcwisniewski@vbg.org
IF TO THE CONTRACTOR:	_____ _____ _____ _____
ATTN:	_____

ARTICLE XIII – CHANGE ORDERS

If the Village requests any change to the Work the Village shall do so by delivering Notice of the same to the Contractor and the change requested by the Village shall be effective upon receipt of the Notice by the Contractor. The Contractor may propose a change to the Work by delivering Notice of the proposed change along with a description of the changes full effect on the Work to the Village; provided, such requested change shall not be deemed accepted until the Village has delivered to the Contractor Notice of the same. Prior to approving a proposed change to the Work by the Contractor, the Village may request such additional documentation as it deems necessary to investigate the proposed change. The Contractor shall be responsible for informing all its employees and subcontractors of any changes to the Work, whether such change is requested by the Contractor or the Village.

ARTICLE XIV – NOTICE OF STARTING WORK

The Contractor shall provide Notice to the Village prior to the Contractor, or its employees or subcontractors, starting the Work or any phase of the Work.

ARTICLE XV – SEQUENCE OF THE WORK

The Director of Public Works shall have the power to direct the order and sequence of the Work. On any major portion of the Work, all accessories shall be set coincident with the main construction. Payment for major portions of the Work may be withheld until proper completion of accessories.

ARTICLE XVI – SUPERVISION

The Director of Public Works shall have override power to superintend and direct the Work, and the Contractor shall perform all of the Work herein specified to the satisfaction, approval and acceptance of the Director of Public Works. The Contractor shall have at all times a competent foreman or superintendent at the Work's site, who shall have full authority to act for the Contractor and to receive and execute orders from the Director of Public Works, and any instructions given to such superintendent or person, executing work for the Contractor, shall be binding on the Contractor as though it was personally given to the Contractor.

ARTICLE XVII – STANDARD OF WORK AND WORKERS

The Contractor shall employ competent staff and shall discharge, at the request of the Director of Public Works, any incompetent, unfaithful, abusive or disorderly workers in its employ. Where experts or skilled workers must be employed, only expert or skilled workers shall be employed.

ARTICLE XVIII – CONDITIONS OF THE WORK SITE

The Contractor shall provide and maintain such sanitary accommodations for the use of its employees as may be necessary to comply with the State and local Board of Health requirements. Public nuisances will not be permitted. The Contractor shall leave said Work's site(s) in the best possible condition to the complete satisfaction of the Director of Public Works. No vehicles of any kind shall be placed, parked, or operated upon any grass areas at any time except as authorized by the Director of Public Works or his authorized representative. Further, the Contractor shall exercise every precaution for the protection of all persons and all property. The safety provisions of all-applicable laws and ordinances shall be strictly observed. Any practice hazardous in the opinion of the Director of Public Works or his authorized representatives shall be immediately discontinued by the Contractor upon his receipt of instructions from the Director of Public Works or his authorized representative. To the maximum extent permitted by law, the Contractor shall be responsible for all safety-related matters.

ARTICLE XIX – WARRANTY PERIOD

All material and workmanship shall be warranted and guaranteed according to manufacturer's recommendation after inspection and approval by the Director of Public Works or his designated representative. All work performed by the Contractor shall be warranted by the Contractor following completion and final acceptance of the Work for a period of twelve (12) months from the date of final, and not substantial, completion.

ARTICLE XX – ACCIDENTS

In the event of any accident of any kind that involves the general public or property of the Village or a third party, the Contractor shall immediately notify the Director of Public Works by phone as well as provide Notice of the same. The Notice shall include a full accounting of all details of the accident. The Contractor shall furnish the Village with copies of all reports of such accidents at the same time that the reports are forwarded to any other interested parties.

ARTICLE XXI – NO ASSIGNMENT

If the Contractor sublets or assigns any part of the Work, then the Contractor shall not under any circumstances be relieved of its liabilities hereunder. All transactions of the Village shall be with the Contractor. Subcontractors shall be recognized only in the capacity of employees or workmen and shall be subject to the same requirements as to character and competence. The Contractor shall not assign, transfer, convey, sell or otherwise dispose of the whole or any part of this Contract to any person, firm or corporation without written consent of the Director of Public Works or his authorized representative.

ARTICLE XXII – DEFAULT

The following shall constitute a default an "**Event of Default**" by the Contractor under this Contract:

A. If the Contractor shall fail to strictly observe or perform one or more of the terms, conditions, covenants and agreements of this Contract;

B. If there shall be placed on any property owned by the Village any mechanics', materialmen' or suppliers' lien;

C. If there shall be instituted any proceeding against the Contractor seeking liquidation, dissolution or similar relief and the same shall not be dismissed within forty-five (45) calendar days;

D. If there shall be appointed any trustee, receiver or liquidator of the Contractor and such appointment shall not have been vacated within forty-five (45) calendar days; and

E. If the Contractor fails to maintain or obtain any and all permits, licenses and the like, if any, required by the Village, State or Federal governments for the Work.

Upon any Event of Default, the Village shall have the option of (**i**) terminating the Contract; (**ii**) pursuing any remedy available to it at law or in equity; or (**iii**) pursuing both simultaneously. In addition, upon an Event of Default, the Village may withhold payments due to the Contractor until it has hired a replacement of the Contractor and deducted all costs of hiring a replacement.

ARTICLE XXIII – DELAYS

The Contractor shall not be liable in damages for delays in performance when such delay is the result of fire, flood, strike, acts of God, or by any other circumstances which are beyond the control of the Contractor; provided, however, under such circumstances the Village may, at its option, cancel the Contract.

ARTICLE XXIV – COMPLIANCE WITH LAWS

The Contractor shall comply with all applicable laws, regulations and rules promulgated by any federal, state, local, or other governmental authority or regulatory body pertaining to all aspects of the Work, now in effect, or which may become in effect during the performance of the Work. The scope of the laws, regulations, and rules referred to in this paragraph includes, but is in no way limited to, the Illinois Human Rights Act, Illinois Equal Pay Act of 2003, Occupational Safety & Health Act along with the standards and regulations promulgated pursuant thereto (including but not limited to those safety requirements involving work on elevated platforms), all forms of traffic regulations, public utility, Interstate and Intrastate Commerce Commission regulations, Workers' Compensation Laws, Public Construction Bond Act, Public Works Preference Act, Employment of Illinois Workers on Public Works Act, USA Security Act, federal Social Security Act (and any of its titles), and any other law, rule or regulation of the Illinois Department of Labor, Department of Transportation, Illinois Environmental Protection Act, Illinois Department of Natural Resources, Illinois Department of Human Rights, Human Rights Commission, EEOC, and the Village of Buffalo Grove. Notwithstanding the following, the Contractor shall particularly note that:

A. NO DISCRIMINATION – The Contractor shall comply with the provisions of the Illinois Public Works Employment Discrimination Act and the Illinois Human Rights Act/Equal Opportunity Clause which, pursuant to Illinois law, are deemed to be part of this Contract.

B. FREEDOM OF INFORMATION - The Contractor agrees to furnish all documentation related to the Contract, the Work and any documentation related to the Village required under an Illinois Freedom of Information Act (ILCS 140/1 et. seq.) ("**FOIA**") request within five (5) calendar days after the Village issues Notice of such request to the Contractor. The Contractor agrees to defend, indemnify and hold harmless the Village, and agrees to pay all reasonable costs connected therewith (including, but not limited to attorney's and witness fees, filing fees and any other expenses) for the Village to defend any and all causes, actions, causes of action, disputes, prosecutions, or conflicts arising from Contractor's actual or alleged violation of FOIA or the Contractor's failure to furnish all documentation related to a FOIA request within five (5) calendar days after Notice from the Village for the same. Furthermore, should the Contractor request that the Village utilize a lawful exemption under FOIA in relation to any FOIA request thereby denying that request, Contractor agrees to pay all costs connected therewith (such as attorneys' and witness fees, filing fees and any other expenses) to defend the denial of the request. This defense shall include, but not be limited to, any challenged or appealed denials of FOIA requests to either the Illinois Attorney General or a court of competent jurisdiction.

C. ILLINOIS WORKERS ON PUBLIC WORKS ACT - To the extent applicable, the Contractor shall comply with the Illinois Workers on Public Works Act, 30 ILCS 570/1 et seq., and shall provide to the Village any supporting documentation necessary to show such compliance.

D. NOT A BLOCKED PERSON - The Contractor affirms and covenants that neither the Contractor nor any individual employed by the Contractor for this Work or under this Contract is a person forbidden from doing business with a unit of local government under Executive Order No. 13224 (Sept 23, 2001), 66 Fed.Reg. 49,079 (Sept 23, 2001) or is a person registered on the Specially Designated Nationals and Blocked Persons List. The Contractor shall indemnify the Village from all costs associated with failure to comply with this paragraph.

E. SUBSTANCE ABUSE PREVENTION ON PUBLIC WORKS ACT - The Contractor knows, understands and acknowledges its obligations under the Substance Abuse Prevention on Public Works Act (820 ILCS 265/1 et seq.), and shall comply and require all subcontractors and lower tiered contractors to comply with the requirements and provisions thereof.

F. PREVAILING WAGE ACT - The Village is an Illinois unit of local government, and the Work hereunder is subject to the Illinois Prevailing Wage Act, 820 ILCS 130/0.01, et seq. Consequently, the Contract and each subcontractor shall submit with their application for payment a signed statement attesting that: (i) certified payroll has been submitted to the Illinois Department of Labor (ii) such payroll is true and accurate; (iii) the hourly rate paid to each worker is at least equal to the prevailing wage for such work; and (iv) the Contractor or subcontractor is aware that filing a falsely certified payroll is a Class B Misdemeanor. Any delay in processing the payments due to a lack of aforementioned signed statement shall not be an event of default by the Village and shall not excuse any delay by the Contractor who shall proceed with the Work as if no delay in payment has occurred. The Contractor and Village shall agree to take any further steps not outlined above to ensure compliance with the Prevailing Wage Act. Upon two business day's Notice, the Contractor and each subcontractor shall make available to the Village their records to confirm compliance with the Prevailing Wage Act. Finally, to ensure compliance with Prevailing Wage Act, the Contractor and each subcontractor shall keep for a period of not less than 5 years after the Work has been completed records of all laborers, mechanics, and other workers employed by them for the Work; the records shall include each worker's name, address, telephone number, classification or classifications, the hourly wages paid in each period, the number of hours worked each day, the starting and ending times of work each day and, when available, last four digits of the social security number. The Contractor shall provide a list of every name, address, phone number and email of every sub-contractor for the Work

Current rates can be located on the Illinois Department of Labor website.
https://www2.illinois.gov/idol/Laws-Rules/CONMED/Pages/Rates.aspx

ARTICLE XXV – NO WAIVER OF RIGHTS

A waiver by the Village of any Event of Default or any term of provision of this Contract shall not be a waiver of the same Event of Default, another Event of Default or any other term or provision of this Contract.

ARTICLE XXVI – CONTROLLING LAW AND VENUE

This Contract is entered into in the State of Illinois, for work to be performed in the State of Illinois and shall be governed by and construed in accordance with the laws of the State of Illinois. Any legal matters or dispute shall be resolved in the Circuit Court of Cook County and the Parties hereby submit to the jurisdiction of such Circuit Court. This Contract shall be construed without regard to any presumption or other rule requiring construction against the Party causing the Contract to be drafted.

ARTICLE XXVII – MISCELLANEOUS

A. AMENDMENT – This Contract may be amended only in writing executed by both Parties.

B. NO RECORDING – This Contract, or a memorandum thereof, may not be recorded in any form by either Party. If either Party records this Contract, or a memorandum thereof, they shall immediately file a release of the same.

C. SECTION HEADINGS – The headings in the Contract are intended for convenience only and shall not be taken into consideration in any construction or interpretation of the Contract.

D. NO THIRD-PARTY BENEFICIARIES – This Contract does not confer any rights or benefits on any third party.

E. BINDING EFFECT – This Contract shall be binding and inure to the benefit of the Parties hereto, their respective legal representatives, heirs and successors-in-interest.

F. ENTIRE AGREEMENT – This Contract supersedes all prior agreements and understandings and constitutes the entire understanding between the Parties relating to the subject matter hereof.

G. SEVERABILITY - If any term, condition or provision of the Contract is adjudicated invalid or unenforceable, the remainder of the Contract shall not be affected and shall remain in full force and effect, to the fullest extent permitted by law.

H. TORT IMMUNITY DEFENSES - Nothing contained in this Contract is intended to constitute nor shall constitute a waiver of the rights, defenses, and immunities provided or available to the Village under the Local Governmental and Governmental Employees Tort Immunity Act, 745 ILCS 10 *et seq*.

I. CALENDAR DAYS AND TIME. Unless otherwise provided in this Contract, any reference in this Contract to "day" or "days" shall mean calendar days and not business days. If the date for giving of any notice required to be given, or the performance of any obligation, under this Contract falls on a Saturday, Sunday or federal holiday, then the notice or obligation may be given or performed on the next business day after that Saturday, Sunday or federal holiday.

J. COUNTERPARTS – This Contract may be executed by the Parties in any number of counterparts, each of which shall be deemed an original, but all of which together shall constitute an original instrument.

IN WITNESS WHEREOF, the Parties hereto have caused the Contract to be executed as of the Effective Date.

Village of Buffalo Grove,
an Illinois home-rule unit of government

By:_____
Name: Dane Bragg
Title: Village Manager

Company : Integral Power Atlantic
[An Illinois __LLC____ company]

By:_____
Name: _____
Title: _____

CONTRACT EXHIBIT C- FORM OF PERFORMANCE AND PAYMENT BOND

Bond Number: _____

KNOW ALL MEN BY THESE PRESENTS, That _____ (the "**Principal**") and _____ _____ (the "**Surety**"), are held and firmly bound unto the Village of Buffalo Grove, an Illinois home-rule unit of government (the "**Village**"), the full and just sum of _____Dollars ($_____) in lawful money of the UNITED STATES OF AMERICA as herein provided.

THE CONDITION OF THIS OBLIGATION is such that the Principal and Surety agree to bind themselves, their successors, assigns, executors, heirs and administrators, jointly and severally, for the full and faithful performance of the Work as defined in that particular Street Light Maintenance contract between Principal and the Village dated __ day of _____, 20__, (hereinafter referred to as the "**Contract**"), a copy of which is attached and incorporated by reference as though fully set forth herein.

NOW THE CONDITIONS OF THIS OBLIGATION ARE SUCH that if the said Principal (**i**) shall in all respects keep and perform all the undertakings, covenants, terms, conditions and agreements of the Contract; (**ii**) shall pay all sums of money due or to become due, for any labor, materials, apparatus, fixtures or equipment furnished for the Work provided in said Contract; and (**iii**) shall remove and replace any defects in workmanship or materials which may be apparent or may develop within the ARTICLE XIX – WARRANTY PERIOD of the Contract, then this obligation shall be null and void; otherwise it shall remain in full force and effect.

And the said Surety, for value received, hereby stipulates and agrees that no change, extension of time, alteration or addition to the terms of the Contract or the Work thereunder shall in any way affect its obligation on this Bond, and it does hereby waive notice of any such change, extension of time, alteration or addition to the terms of the Contract or to the Work.

IN WITNESS WHEREOF, we have hereunto set our hands and sea ___ day of _____, 20__.

SURETY	**PRINCIPAL**
By: _____	**By:** _____
Name: _____	**Name:** _____
Title: _____	**Title:** _____
ATTEST	**ATTEST**
By: _____	**By:** _____

NOTE: Date of Bond must not be prior to date of Contract.
If Contractor is Partnership, all partners should execute Bond.
IMPORTANT: Surety companies executing Bonds must appear on the Treasury Departments most current list (Circular 570 as amended) and be authorized to transact business in the state where the Work is located.

CONTRACT EXHIBIT D- PARTIAL WAIVER

PARTIAL LIEN WAIVER

STATE OF ILLINOIS

COUNTY OF _____

TO WHOM IT MAY CONCERN:
WHEREAS the undersigned has been employed by _____
to furnish _____
for the premises known as _____
of which _____ is the owner.
THE undersigned, for and in consideration of _____
($_____
_____
) Dollars, and other good and valuable considerations, the receipt whereof is hereby acknowledged, do(es) hereby waive and release any and all lien or claim of, or right to, lien, under the statutes of the State of Illinois, relating to mechanics' liens, with respect to and on said above-described premises, and the improvements thereon, and on the material, fixtures, apparatus or machinery furnished, and on the moneys, funds or other considerations due or to become due from the owner, on account of all labor, services, material, fixtures, apparatus or machinery, furnished to this date by the undersigned for the above-described premises, INCLUDING EXTRAS.*
DATE _____ COMPANY NAME _____
ADDRESS _____
SIGNATURE AND TITLE _____

*EXTRAS INCLUDE BUT ARE NOT LIMITED TO CHANGE ORDERS, BOTH ORAL AND WRITTEN, TO THE CONTRACT

CONTRACTOR'S AFFIDAVIT

STATE OF ILLINOIS

COUNTY OF _____

TO WHOM IT MAY CONCERN:
THE UNDERSIGNED, (NAME) _____ BEING DULY SWORN, DEPOSES AND SAYS THAT HE OR SHE IS (POSITION) _____ OF (COMPANY NAME) _____ WHO IS THE CONTRACTOR FURNISHING _____ WORK ON THE BUILDING LOCATED AT _____
OWNED BY _____
That the total amount of the contract including extras* is $ _____ on which he or she has received payment of $ _____ prior to this payment. That all waivers are true, correct and genuine and delivered unconditionally and that there is no claim either legal or equitable to defeat the validity of said waivers. That the following are the names and addresses of all parties who have furnished or delivered material or labor, or both, for said work and all parties having contracts or sub contracts for specific portions of said work or for material entering into the construction thereof and the amount due or to become due to each, and that the items mentioned include all labor and material required to complete said work according to plans and specifications:

NAMES AND ADDRESSES	WHAT FOR	CONTRACT PRICE INCLDG EXTRAS*	AMOUNT PAID	THIS PAYMENT	BALANCE DUE
TOTAL LABOR AND MATERIAL INCLUDING EXTRAS* TO COMPLETE.					

That there are no other contracts for said work outstanding, and that there is nothing due or to become due to any person for material, labor or other work of any kind done or to be done upon or in connection with said work other than above stated.

DATE _____ SIGNATURE: _____

SUBSCRIBED AND SWORN TO BEFORE ME THIS _____ DAY OF _____, _____

*EXTRAS INCLUDE BUT ARE NOT LIMITED TO CHANGE ORDERS, BOTH ORAL AND WRITTEN, TO THE CONTRACT.

_____
NOTARY PUBLIC

CONTRACT EXHIBIT E- FINAL WAIVER

FINAL WAIVER OF LIEN

STATE OF ILLINOIS

COUNTY OF _____

TO WHOM IT MAY CONCERN:
WHEREAS the undersigned has been employed by _____
to furnish _____
for the premises known as _____
of which _____ is the owner.

THE undersigned, for and in consideration of _____ ($_____) Dollars, and other good and valuable considerations, the receipt whereof is hereby acknowledged, do(es) hereby waive and release any and all lien or claim of, or right to, lien, under the statutes of the State of Illinois, relating to mechanics' liens, with respect to and on said above-described premises, and the improvements thereon, and on the material, fixtures, apparatus or machinery furnished, and on the moneys, funds or other considerations due or to become due from the owner, on account of all labor, services, material, fixtures, apparatus or machinery, heretofore furnished, or which may be furnished at any time hereafter, by the undersigned for the above-described premises, INCLUDING EXTRAS.*

DATE _____ COMPANY NAME _____
ADDRESS _____
SIGNATURE AND TITLE _____

*EXTRAS INCLUDE BUT ARE NOT LIMITED TO CHANGE ORDERS, BOTH ORAL AND WRITTEN, TO THE CONTRACT

CONTRACTOR'S AFFIDAVIT

STATE OF ILLINOIS

COUNTY OF _____

TO WHOM IT MAY CONCERN:

THE UNDERSIGNED, (NAME) _____ BEING DULY SWORN, DEPOSES AND SAYS THAT HE OR SHE IS (POSITION) _____ OF (COMPANY NAME) _____ WHO IS THE CONTRACTOR FURNISHING _____ WORK ON THE BUILDING LOCATED AT _____
OWNED BY _____
That the total amount of the contract including extras* is $ _____ on which he or she has received payment of $ _____ prior to this payment. That all waivers are true, correct and genuine and delivered unconditionally and that there is no claim either legal or equitable to defeat the validity of said waivers. That the following are the names and addresses of all parties who have furnished or delivered material or labor, or both, for said work and all parties having contracts or sub contracts for specific portions of said work or for material entering into the construction thereof and the amount due or to become due to each, and that the items mentioned include all labor and material required to complete said work according to plans and specifications:

NAMES AND ADDRESSES	WHAT FOR	CONTRACT PRICE INCLDG	AMOUNT PAID	THIS PAYMENT	BALANCE DUE
TOTAL LABOR AND MATERIAL INCLUDING EXTRAS*					

That there are no other contracts for said work outstanding, and that there is nothing due or to become due to any person for material, labor or other work of any kind done or to be done upon or in connection with said work other than above stated.

DATE _____ SIGNATURE: _____

SUBSCRIBED AND SWORN TO BEFORE ME THIS _____ DAY OF _____, _____

*EXTRAS INCLUDE BUT ARE NOT LIMITED TO CHANGE ORDERS, BOTH ORAL AND WRITTEN, TO THE CONTRACT.

_____
NOTARY PUBLIC

CONTRACT EXHIBIT A- DESCRIPTION OF THE WORK

[Insert Description of the Work]

DESCRIPTION OF THE WORK

The work services, equipment, labor and/or materials below shall be collectively referred to as the "Work":

1. GENERAL DESCRIPTION

A. Purpose: The purpose of the project is to provide for the public health, safety and welfare of the residents and visitors, by maintaining an efficient street lighting system to aid pedestrians and vehicle movement through the community after dark.

B. Scope: Contractor shall be skilled in trouble shooting and making repairs to lighting systems, including power center equipment (lighting controllers), controls, underground cables and light fixture lamps/ballasts.
Contractor shall furnish all equipment necessary to replace street light poles and to do all phases of repair and maintenance of the Village streetlight system.
Contractor shall maintain a sufficient inventory of Village of Buffalo Grove approved street lighting standards (fixtures, poles, distribution centers, base covers, fuses and fuse holders) and related components so as not to delay timely replacement and repair.

2. PLANS & SPECIFICATIONS

The Plans & Specifications shall be understood to include Appendices which are incorporated hereby.

3. SPECIFICATIONS GENERAL

3.0 VILLAGE OCCUPANCY

A. The Contractor shall cooperate with Village to minimize conflict, and to facilitate Village's operations.

3.1 CARE AND PROTECTION OF PROPERTY

A. Contractor shall be responsible for the preservation of all public and private property and use every precaution necessary to prevent damage thereto. If any direct or indirect damage is done to public or private property by or on account of any act, omission, neglect, or misconduct in the execution of the work on the part of the contractor, restore such property to a condition similar or equal to that existing before the damage was done, or make good the damage in other manner acceptable to the Village.

3.2 WORK COORDINATION AND SEQUENCE

A. Schedule of Work - Contractor shall be required to respond to a repair work order in a timely manner, consistent with the established priority of the work task code (Section 4.3).

B. Working Hours - The Contractor will be allowed to schedule his normal work hours between the hours of 7:00 A.M. and 4:00 P.M. **Monday through Saturday. (providing Saturday hours are paid at 1.0 scale, and not recorded or billed as Overtime)**

Work during other hours will be allowed only as authorized by the Public Works Director (or authorized representative).

SPECIFICATIONS GENERAL (cont.)

C. Concurrent Operations - This contract is a nonexclusive contract with the Village. The Village reserves the right to use other contractors or its own employees to perform work similar to that being performed under the terms of this contract. Performance of work by others shall be construed as being consistent with the terms of this contract and will not be cause for the Contractor to cease performance of work as directed.

D. The Village will notify the Contractor when repairs are necessary

3.3 CHANGE PROCEDURES

A. Submit name of individual authorized to receive change documents and be responsible for informing others in Contractor's employ or Subcontractors of changes to the Work.

B. Contractor may propose changes by submitting a request for change to the Village of Buffalo Grove Public Works Director (Public Works Director) or his designee, describing proposed change and its full effect on the Work. Include a statement describing reason for the change, and effect on Contract Sum/Price and Contract Time with full documentation.

C. Document each quotation for change in cost or time with sufficient data to allow evaluation of quotation. On request, provide additional data to support computations

D. Execution of Change Orders: Change order shall not be considered valid until executed by both the Village and the Contractor.

3.4 CONTRACTOR RESPONSIBILITIES

A. The Contractor shall provide equipment, materials, labor and tools to complete repairs, removal and installation as required.

B. The Contractor is solely responsible for construction means, methods, techniques, sequences and procedures and for safety precautions and programs.

C. All equipment and installation materials shall be delivered to the installation Contractor with freight and all handling charges included in the proposed price. No materials may be shipped directly to the job site without the prior approval of the Village.

D. The Contractor shall minimize disruptions to the normal operations of the Village and shall render all reasonable assistance when required. The Contractor shall remove all materials, debris and rubbish from the site on a daily basis.

E. The Contractor is responsible for acts and omissions of his employees and his sub-contractors and their agents.

F. The Contractor shall protect Village property and all persons and shall be liable for any and all damages resulting from his operations.

G. The Contractor shall be responsible for the repair or replacement of any facility or utility damaged during a repair, replacement or installation.

3.5 INVOICING AND METHOD OF PAYMENT

A. The request for payment will be submitted on forms approved by the Village. The invoice shall itemize each chargeable item for each location using the BUFFALO GROVE – INVOICE WORKSHEET or Village approved alternate (See Appendices) for this purpose.

B. Village will utilize two categories of Work Tasks for assigning work to Contractor. The two categories differ with respect to Village invoicing requirements as follows:

i. For Type A Work Tasks: Type A Work Tasks are the "normal" type of work tasks. Contractor shall aggregate all Type A Work Tasks executed during a given month and submit to the Village one invoice covering all such Work Tasks. Said invoice shall be furnished to the Village within ten (10) calendar days following the last day of the preceding month.

ii. For Type B Work Tasks: Type B Work Tasks are associated with individual specific repairs that are necessitated by accidents or other similar types of occurrences. For such repairs, the Village can reasonably expect to be reimbursed by others for the cost of those repairs. Contractor shall invoice the Village separately for each Type B Work Task. Each such invoice shall be furnished to the Village within two (2) business days following the completion of the work performed as a result of that Type B Work Task. **As noted in section 4.3, Type B work tasks will be assigned a priority task code that specifies the expectations for response.**

C. Payment will be made using the unit prices for Material and the hourly rates for Labor and Equipment provided in the contract. The Labor and Equipment rates shall only include time actually spent on the job within the Village. Travel time to and from the Village shall not be charged.

D. The Village will pay according to the Illinois Prompt Payment Act.

3.6 WARRANTY

All material and workmanship shall be guaranteed for a period of one (1) year after inspection and approval by the Public Works Director or his designated representative. Any defects found shall be corrected in a timely manner at the Contractor's expense.

4. PART II BID SPECIFICATIONS

4.0 GENERAL DESCRIPTION

A. The Contractor shall include provisions for the maintenance of the street lighting facilities in accordance with this specification for the illumination of all public roadways, which are within the corporate limits of the Village. The Village shall continuously be kept appraised by the Contractor of the status of all streetlights.

B. Work shall include but not limited to:

1. Streetlight repairs (i.e. bulbs, ballast, photocells, fuses etc.)
2. Cable repair or replacement
3. Pole replacement (concrete and Cor-Ten)
4. Breakaway replacement
5. Fixture replacement
6. Relamping
7. Inspections
8. Base cover, skirt and/or light pole hand-hole repair or replacement
9. Light pole foundation modifications or replacement

4.1 OBSERVANCE OF LAWS, ORDINANCES AND REGULATIONS

All work required in this specification shall conform to the requirements of the "National Electric Code" as amended.

The Contractor at all times during the life of this contract shall observe and abide by all Federal, State and Local laws which in any way affect the conduct of the work and with all decrees and orders of courts of competent jurisdiction.

The Contractor shall be governed by all municipal ordinances and regulations, which in any way affect the conduct of the work.

The Contractor shall procure at his own expense all necessary licenses and permits in connection with the work of his Contract.

4.2 TRAFFIC CONTROL AND WORK AREAS

The Contractor shall erect substantial barricades to protect his work at all points as specified by Federal and State Standards for work zone protection. The Contractor shall place at such points the necessary warning signs, lights, and other suitable devices to protect his work properly and to provide for the convenience and safety of the public at all times. The Contractor shall maintain such barricades, signs, lights and protective devices until the need for them has passed.

In addition, the Contractor shall conform to any Federal and State Department of Transportation regulations applicable to work being performed on or along roadways and any other areas of vehicular activity. The Contractor shall use necessary signage, barricades, lights, directional devices, and any other available means of directing a safe transition of vehicular traffic past the work site, with the least inconvenience possible to said vehicular traffic.

4.3 RESPONSE AND NOTIFICATION

The Contractor shall respond to repairs based on the assigned priority of each task code. (see prioritization code in 4.4)

- High priority tasks = 24 hour response expectation
- Medium priority tasks = 48 hour response expectation
- Low priority tasks = 72 hour response expectation

4.4 WORK TASKS – WORKFLOW

The Village of Buffalo Public Works Department utilizes Cartegraph OMS for our workflow and asset management system. Prospective bidders will either use this system to track and report completed work or provide an agreeable alternative system that will do the same. Any agreed upon alternative workflow and asset management system would still require task completion and same day reporting as Cartegraph.

The Buffalo Grove Public Works Department is open to alternative workflow and asset management solutions as suggested by prospective bidders. Documentation and reporting of completed tasks would still be the responsibility of the Contractor the same day that repairs have been completed. Alternative workflow and asset management solutions should be submitted for review as part of the bid package by the bidder.

The Contractor shall be responsible to provide their staff with an iPad or mobile laptop computer to access, create and complete Cartegraph OMS tasks. The Village of Buffalo Grove Public Works Department will provide the Contractor's staff with training on Cartegraph OMS and the expected workflow.

If the Contractor elects to utilize an agreed upon alternative workflow and asset management solution, the Contractor shall be responsible to provide all necessary software and hardware to satisfactorily complete timely documentation and reporting of assigned or completed tasks.

4.5 PUBLIC RELATIONS

The goal of the Village of Buffalo Grove is to provide professional, courteous and friendly public services to residents, businesses, and visitors within the Village. With this in mind, the Contractor and his personnel will maintain a professional and courteous attitude whenever dealing with the Public.

If the Contractor or his personnel should find himself in a disagreeable situation, or cannot answer a resident's question or concern suitably, he shall direct the party to the Public Works Director, or his authorized representative.

4.6 RATES UNDER CONTRACT

The Contractor shall furnish the Village with labor (straight time), vehicle, and equipment rates to be charged under this contract. Rates will not change, including any union or brotherhood negotiated scale increases, for the period of this contract. Work shall be performed at straight time, unless otherwise authorized by the Public Works Director or his authorized representative. Material will be listed, itemized, and charged according to the price bid.

4.7 FINAL POLICING OF WORK SITE

Before completed maintenance work on public property will be ready for final inspection, the Contractor will have removed from the project sites all surplus equipment, machinery, materials, debris, barricades and signs. The Contractor shall leave said project sites in the best possible condition, to the complete satisfaction of the Public Works Director, or his authorized representative.

4.8 RELAMPING

The Village may increase or decrease the scope of its relamping program and designate certain areas of the Village for relamping during the contract period. This activity is an option.

4.9 REQUIREMENTS OR ESTIMATED BID QUANTITIES

Acceptance of the bid will bind the Village to pay for, at unit bid prices, only quantities ordered and delivered. Any reference to forecasted or estimated quantities within the bidding documents is intended to inform the bidder of approximate requirements. The Village may purchase as little as zero percent (0%) or as much as two hundred percent (200%) of the forecasted or estimated quantity.

4.10 MATERIALS

A. Poles

Poles are detailed in Appendix D. Exhibits A and B

1. Pole type "A" shall be Ameron International, Centrecon Series Medium Embedded Octagonal Pole, twenty-three (23) feet in height, catalog number MEO-7 (W/MO-AD-8ft. Davit Arm).

2. Pole type "B" shall be Ameron International, Centrecon Series Medium Embedded Octagonal Pole, twenty-eight (28) feet in height, catalog number MEO-8.5 (W/MO-AD-8ft. Davit Arm).

3. Pole type "D" shall be Valmont tapered Cor-Ten steel square upright with 6 ft. long Cor-Ten steel davit(s). The Village utilizes different Cor-Ten pole upright heights as referenced in Appendix D Exhibit B. In some cases, the 35foot pole may be required to be reduced to 34 feet and six inches in length.

Fuses shall be ten (10) amps with Buss fuse holder installed in the power leg inside of the light pole hand hole.

Vertical cables in lighting standards from fuse holder to luminaire shall be number 10, THHN, 600V, stranded copper, single (1) conductor, with ground. Cable shall be color-coded as follows:

Neutral - White

Power - Black

Ground – Green or bare

B. Luminaries and Lamps

Luminaries are detailed in Appendix E. Exhibit A. are to be units manufactured by Lithonia(or alternate approved by the Village in writing), complete with constant voltage ballasts wired for one hundred twenty (120) volt or two hundred forty (240) volt operation, as required. Luminaries are detailed in Appendix E. Exhibit B is to be a unit manufactured by Leotek Light-On group. All fixtures include photocells.

Style 1 LITHONIA KAD 100S R3TB (change ballast for 70W HPS Lamp)

Style 1 LITHONIA KAD 100S R3TB (for 100W HPS Lamp)

Style 4 LITHONIA KAD 250S R3TB (for 250W HPS Lamp)

Style 4 LITHONIA KAD 250 R3TB (change ballast for 310W HPS Lamp)

HOLOPHAN ATB2-P601 LED Fixture

The LEOTEK catalog numbers for these luminaries is as follows:

ECobra-head EC1-6-M-MV-NW-2-530-DB

C. Wire/Cable

1. Underground cable from power source to lighting standards shall be a minimum of #6 stranded two (2) conductor copper commercial grade for direct burial RHH, RHW, USE-XLP, 600 volt with #6 or #8 ground conductor.

2. Any necessary splice in underground cables shall be reported. Splices shall be made by using 3M Scotchcast kits in direct burial cables. No splices are allowed within a cable conduit.

3. Cable slack shall be provided as follows: Two (2) feet of slack at base of light standards and one (1) foot of slack at the source of power. Provide six (6) inches of sand both above and below the conduit in all conduit trenches.

4. All wiring shall have two (2) inch galvanized rigid steel conduit with two (2) inch fiber bushings, or two (2) inch heavy wall PVC schedule 80, used as a raceway for underground cable. Cable in unit duct may be used for long runs with prior approval by the Village.

D. Control Cabinet

1. Circuit Breakers

a. Breakers shall be molded case, heavy duty, bolt-on type.

b. Breakers shall be single or multiple poles with capacities and trip ratings as shown on the individual lighting controller drawings.

c. All lugs and terminators shall be copper. Aluminum copper connectors are not acceptable.

d. Acceptable manufacturers shall be Siemens I.T.E., Square D', Westinghouse, or equal.

2. Surge Arresters

a. Surge arrestors shall be of the valve-type, consisting of a spark gap structure and a non-linear resistive element of silicon carbide valve blocks.

b. The arresters shall be 650 V maximum rated, designed for the protection of 240 volt, single phase, three wire, grounded secondary services. The arresters shall meet all applicable ANSI, NEMA, IEEE, and OSHA Standards.

c. The arresters shall be single pole units as manufactured by Joslyn Mfg., and Supply Co., General Electric Co., or equal.

E. General

All work performed and all materials utilized must meet Village of Buffalo Grove Ordinances and Standards.

INVOICE WORKSHEET

LABOR	HOURS	RATE	SUB-TOTAL
1. Journeyman (x 1.0)			
1.a Journeyman Overtime (x 1.5)			
1.b Journeyman Doubletime (x 2.0)			
		TOTAL LABOR	

EQUIPMENT	HOURS	RATE	SUB-TOTAL
2. Utility truck			
3. Pole Set truck			
4. Aerial truck			
5. Backhoe			
6. Auger			
7. Trencher			
8. Directional Boring Rig			
9. Arrow Board truck / trailer			
		TOTAL EQUIPMENT	

MATERIALS	UNITS	RATE	SUB-TOTAL
10. 70W HPS Lamp			
11. 100W HPS Lamp			
12. 250W HPS Lamp			
13. 310W HPS Lamp			
14. 400W HPS Lamp			
15. Photo Cell			
16. Igniter			
17. HPS Ballast			
18. Fuse Holder			
19. Fuse			
20. Leotek EC1-6-M-MV-NW-2-530-DB			
21. LITHONIA KAD 70S R3TB			
22. LITHONIA KAD 100S R3TB			
23. LITHONIA KAD 250S R3TB			
24. LITHONIA KAD 320S R3TB			
25. LITHONIA KAD 400S R3TB			
26. HOLOPHAN ATB2-P601 LED Fixture			
27. Centrecon MEO 7 Concrete Pole, Type A			
28. Centrecon MEO 8.5 Concrete Pole, Type B			
29. Funk-Linko Corten Pole w/Base Cover (35 foot – Single Davit)			
30. Funk-Linko Corten Pole w/Base Cover (40 foot – Twin Davit)			
31. Funk-Linko Corten Pole w/Base Cover (34.5 foot – Twin Davit)			
32. Pole Numbering Per IDOT Standards with Plaque and hardware			
33. Fixture Numbering Per Village Standards			
34. Aluminum Davit Arm – (8 foot)			
35. Full-height Corten Base Cover			
36. Aluminum Skirt Replacement			
37. Breakaway Couplings (Set of 4) for Corten Pole			
38. Concrete Pole Foundation, 24-inch Diameter			
39. Concrete Foundation Extender			
40. #6 RHH, RHW, USE-XLP, 600V			
41. #8 RHH, RHW, USE-XLP, 600V			
42. 2-inch GRC Conduit			
43. 2-inch IMC Conduit			
44. 2-inch Schedule 80 PVC Conduit			
45. 3M Scotchcast Splicing Kit			
		TOTAL MATERIAL	

STREET LIGHT INSPECTIONS	UNITS	RATE	SUB-TOTAL
46. Unit price to inspect street lights/pole			
		TOTAL INSPECTION COSTS	

STREET LIGHT RE-LAMPING	UNITS	RATE	SUB-TOTAL
47. Unit price to re-lamp street lights			
		TOTAL RE-LAMPING COSTS	

INVOICE TOTAL

Village of Buffalo Grove
Public Works Operations Division
Streetlight Maintenance Record

FORM RFP-1

Contractor:

Subcontractor:

Time Period Covered By Report:

Reported By:

W.O. Date	Pole #	Light Atlas Map No.	Location	Problem	Date Completed	Work Order No.	Work Performed	Bulb Replaced?	Bulb Wrapper Marked w/Pole # and Date Changed?	Lens Cleaned?	Fixture Adjusted?	Pole Inspected? *	Debris Cleared Between Fdn. & Base Plate?	ID # Checked? **	Recommendations

* Pole Inspection shall include, at minimum, checking for the following: physical damage, excessive corrosion, base cover condition, skirt condition, grading around light pole, missing hardware and pole plumbness.

** If ID is missing or incorrect on the light pole, then install or replace ID # sticker/plaque.

Streetlight Maintenance Areas

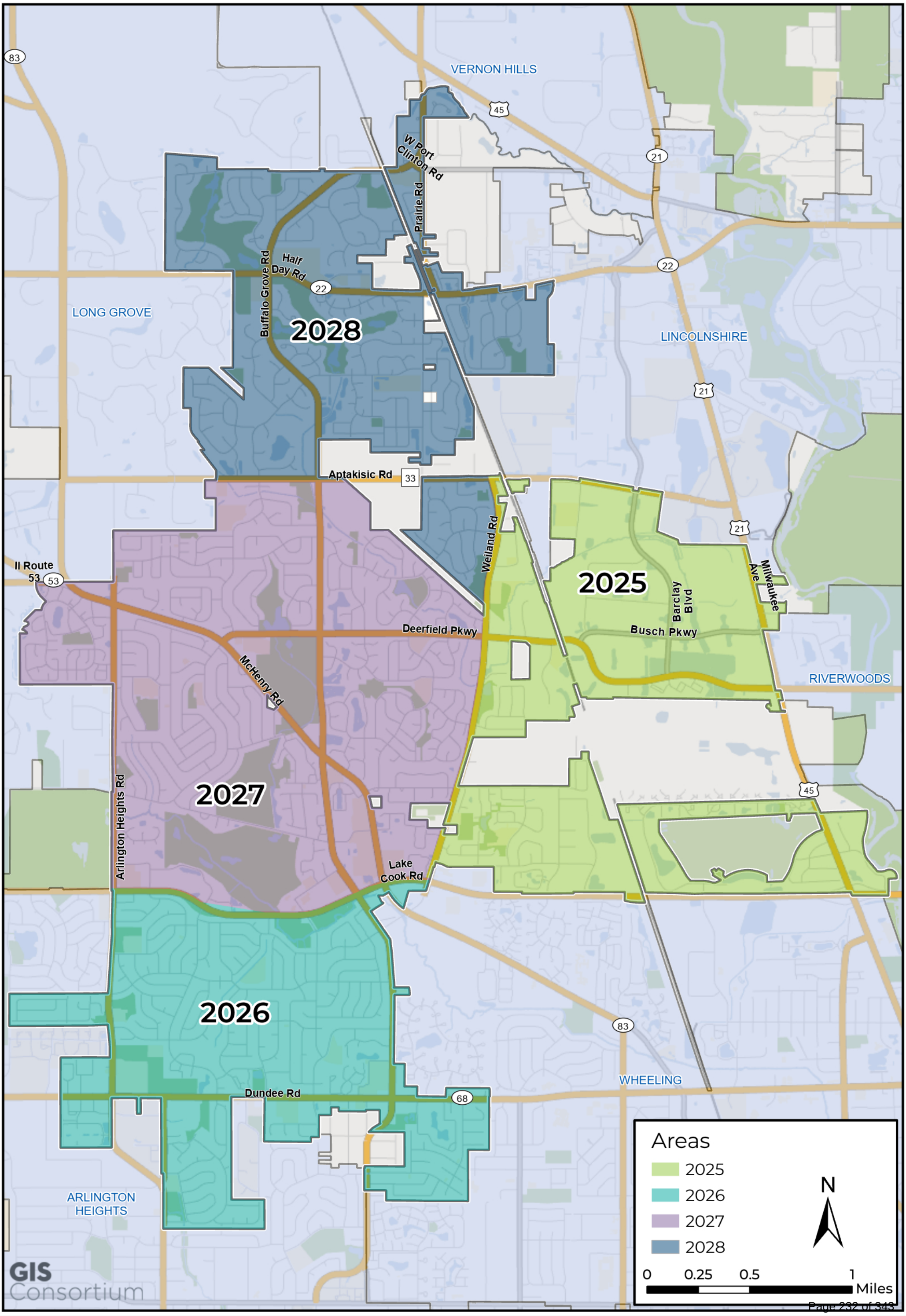

File Location: X:\GISC\Community\BuffaloGrove\Project\20140312_UtilityEdits\Street Lights\20240115 Streetlight Zones

Date Printed: 1/28/2025

EXHIBIT A.

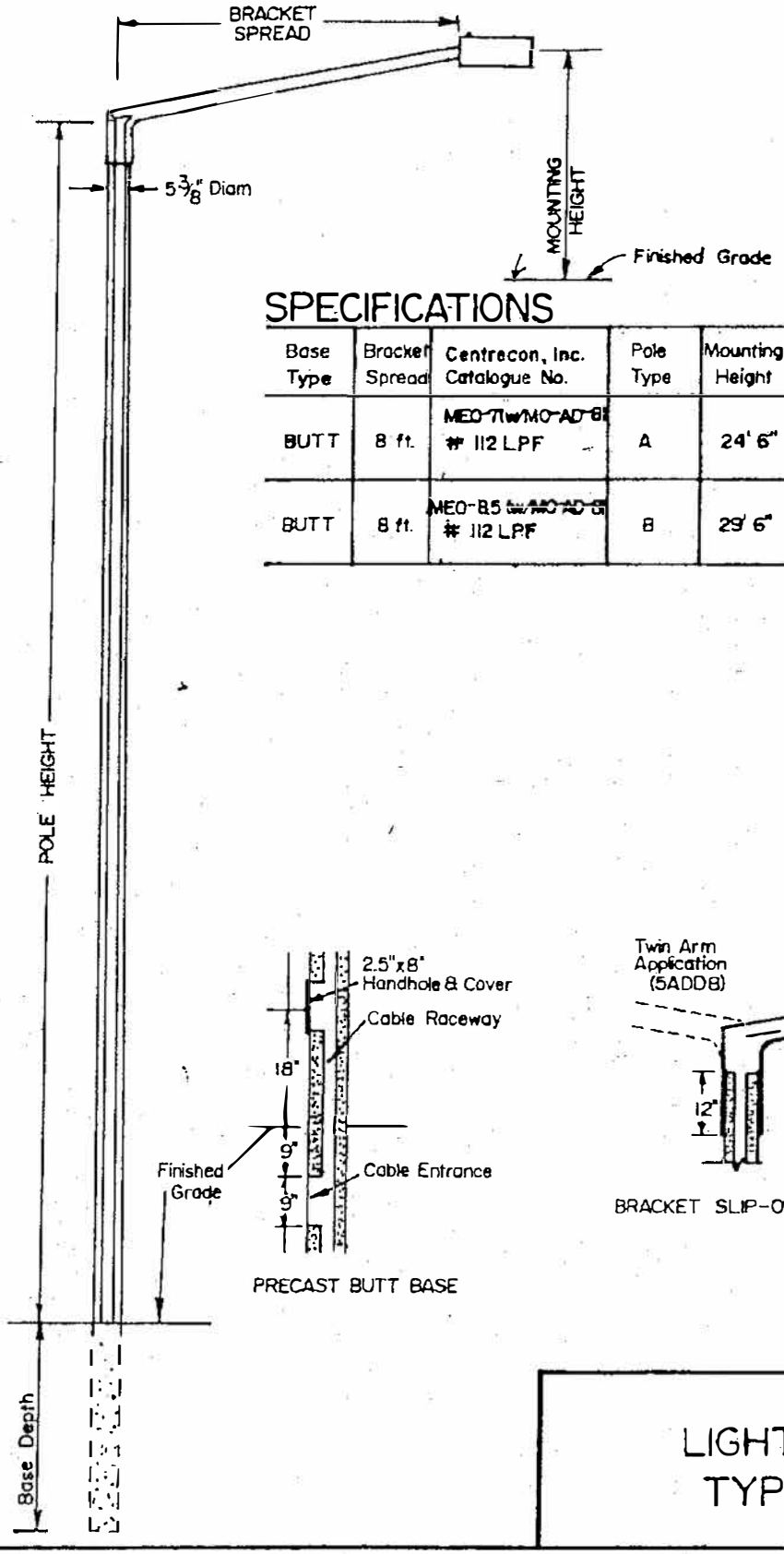

SPECIFICATIONS

Base Type	Bracket Spread	Centrecon, Inc. Catalogue No.	Pole Type	Mounting Height	Pole Height	Pole Diameter	Base Depth
BUTT	8 ft.	MEO-7/w/MO-AD-8 # 112 LPF	A	24' 6"	23' 0"	8"	5'
BUTT	8 ft.	MEO-8.5 w/MO-AD-8 # 112 LPF	B	29' 6"	28' 0"	8.5"	5'

LIGHT POLE
TYPES A&B

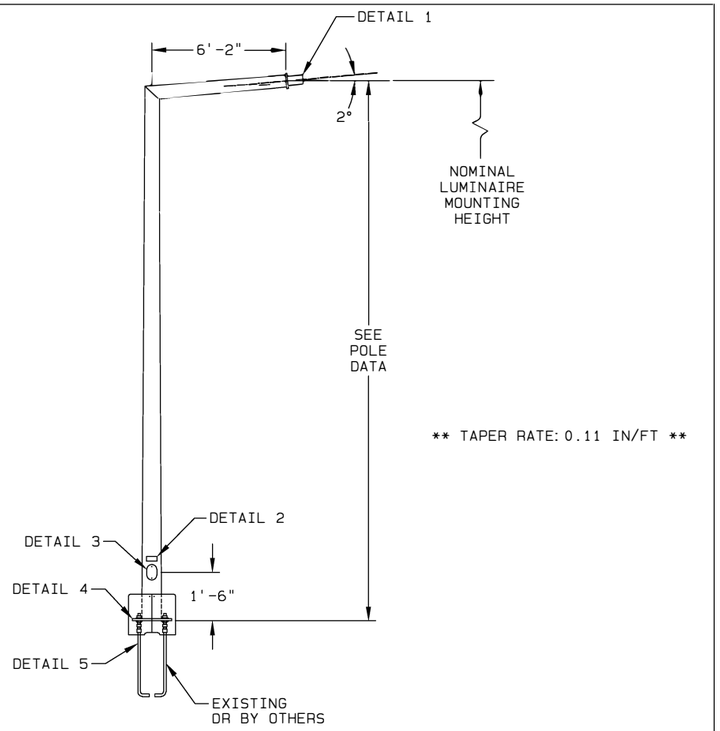

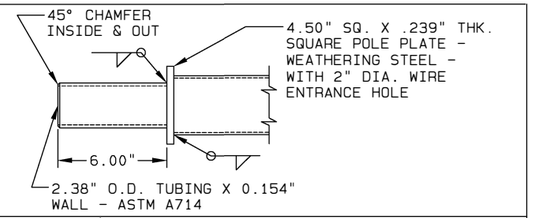

DETAIL 1 | ARM END TENON

ALL HANDHOLES OR FESTOON OUTLETS SHOWN ON THIS DRAWING, WITH A COVER, GASKET AND BONDED WASHERS SUPPLIED BY VALMONT, HAVE BEEN APPROVED IN ACCORDANCE WITH NFPA 70 2014 NEC HANDBOOK SECTION 110.28, SPECIFICALLY ENCLOSURE TYPE 3R (RAINPROOF). THIS ENCLOSURE TYPE PROVIDES A DEGREE OF PROTECTION AGAINST INCIDENTAL CONTACT WITH THE ENCLOSED EQUIPMENT, RAIN, SNOW AND SLEET.

CONFORMANCE TO APPLICABLE NEC REQUIREMENTS OF COMPONENTS NOT PROVIDED BY VALMONT SHALL BE THE RESPONSIBILITY OF THE CONTRACTOR.

NATIONAL ELECTRIC CODE (NEC) REQUIREMENTS

"CLASSIFIED LABEL": UL1598, CATEGORY IEUR (LUMINAIRE POLES) POLES AT LEAST 12FT TALL BUT LESS THAN 100FT.

LABEL IS AFFIXED 3" ABOVE THE LOWEST HANDHOLE RIM.

DETAIL 2 | UL1598 CATEGORY LABELS

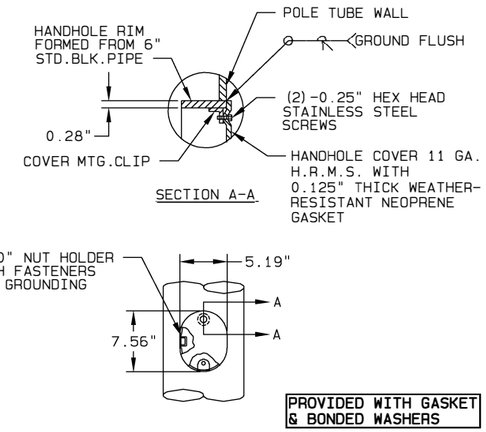

DETAIL 3 | HANDHOLE

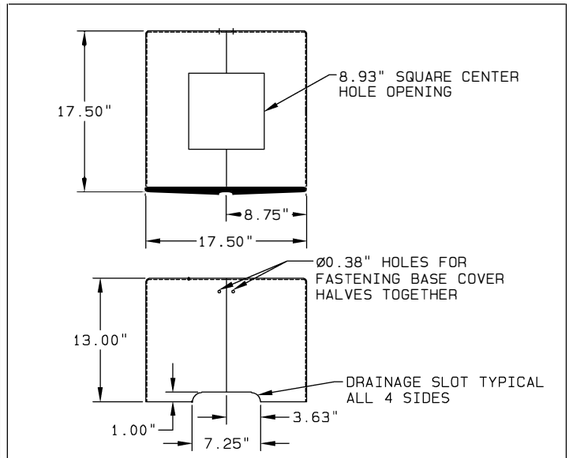

DETAIL 5 | FULL BASE COVER

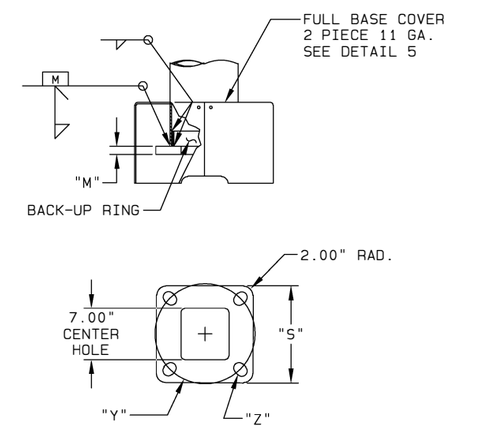

DETAIL 4 | BASE PLATE

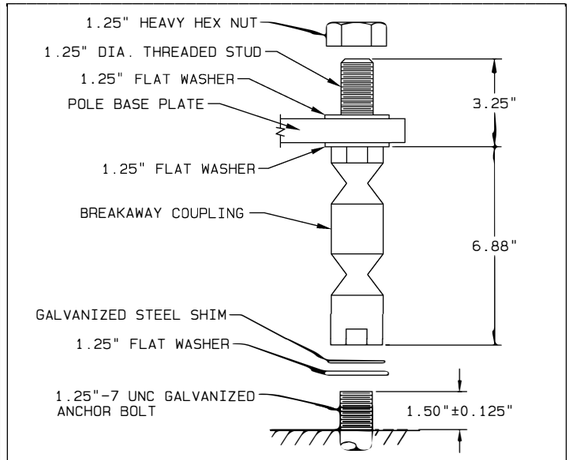

DETAIL 6 | TRANSPO NO.4125 BREAKAWAY COUPLING

ALL ANGLES MEASURED CLOCKWISE FROM HAND-HOLE AS VIEWED FROM SMALL END OF POLE

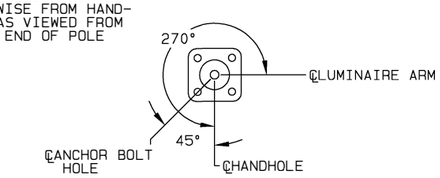

RADIAL INDEX

THE LIGHTING STRUCTURES SHOWN ON THIS DRAWING HAVE BEEN DESIGNED IN ACCORDANCE WITH THE LOADING AND THE NOMINAL STRENGTH REQUIREMENTS OF THE 2015 AASHTO "LRFD SPECIFICATIONS FOR STRUCTURAL SUPPORTS FOR HIGHWAY SIGNS, LUMINAIRES AND TRAFFIC SIGNALS, FIRST EDITION", SLTS-1. THE WIND LOADS WERE CALCULATED FROM AN ULTIMATE WIND VELOCITY OF 120 MPH WITH A MEAN RECURRENCE INTERVAL OF 1700 YEARS.

AASHTO 2015 SPECIFICATIONS

MATERIAL DATA

	ASTM DESIGNATION	MIN. YIELD (KSI)
POLE SHAFT	A595 GR.A	55
BASE PLATE	A36	36
ANCHOR BOLTS	EXISTING OR BY OTHERS	

FINISH DATA

SEE NOTE 1

POLE AND SIGNAL ARM DATA

ITEM	QTY.	POLE TUBE				POLE BASE				ANCHOR BOLT				LUMINAIRE ARM			LUMINAIRE MOUNTING HEIGHT (FT)
		BASE DIA. (IN)	TOP DIA. (IN)	LENGTH (FT)	GAUGE OR THK. (IN)	SQUARE "S" (IN)	BOLT CIRCLE "Y" (IN)	THK. "M" (IN)	HOLE / SLOT "Z" (IN)	DIA. "K" (IN)	LENGTH "J" (IN)	HOOK "H" (IN)	THREAD LENGTH "U" (IN)	BASE DIA. (IN)	LENGTH "L" (FT)	GAUGE OR THK. (IN)	
1	50	8.81	4.96	35.00	7	16.00	16.00	2.00	1.38 X 1.94	1.25	EXISTING OR BY OTHERS			4.96	6.17	7	35.00
2	50	8.81	4.41	40.00	7	16.00	16.00	2.00	1.38 X 1.94	1.25	EXISTING OR BY OTHERS			4.41	6.17	7	40.00

NOTES:

1. PLEASE PROVIDE FINISH COLOR SAMPLE, RAL# OR VALMONT FINISH SPECIFICATION WITH RELEASE FOR MANUFACTURING.

REV	DRAWN BY-DATE	CHECK BY-DATE	DESCRIPTION
—	WL10 09/06/17	JTF 09/07/17	----------

SOLD TO:
SHIP TO:
P.O. #:
AGENT: LIGHTING SOLUTIONS

EXHIBIT B.
BUFFALO GROVE - ILLINOIS
TITLE LIGHTING STRUCTURES

VALMONT INDUSTRIES, INC. RESERVES THE RIGHT TO INSTALL VARIOUS, ENGINEER APPROVED, MATERIAL HANGING ACCOMMODATIONS TO FACILITATE THE MANUFACTURING PROCESS.

valmont
Valley,NE 68064
(402) 359-2201

ORDER NUMBER: 383787-P1
PAGE NUMBER: 1 OF 1
DRAWING NUMBER IL383787P1
REV

Exhibit A. - Light Poles

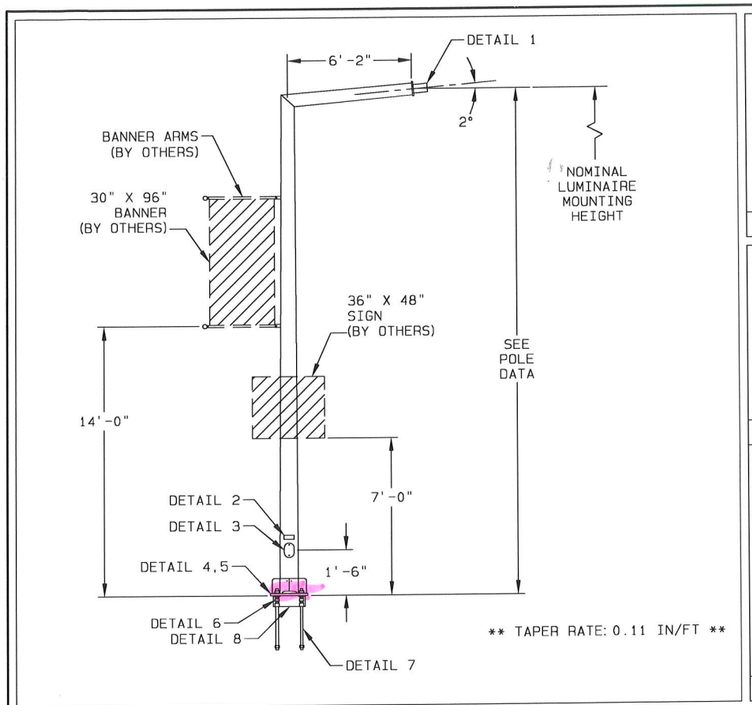

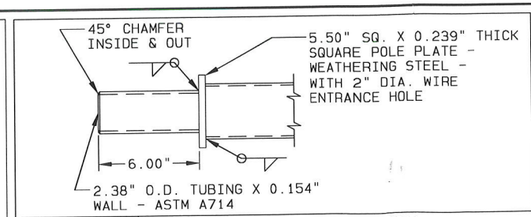

DETAIL 1 — ARM END TENON

ALL HANDHOLES OR FESTOON OUTLETS SHOWN ON THIS DRAWING, WITH A COVER, GASKET AND BONDED WASHERS SUPPLIED BY VALMONT, HAVE BEEN APPROVED IN ACCORDANCE WITH NFPA 70 2014 NEC HANDBOOK SECTION 110.28, SPECIFICALLY ENCLOSURE TYPE 3R (RAINPROOF). THIS ENCLOSURE TYPE PROVIDES A DEGREE OF PROTECTION AGAINST INCIDENTAL CONTACT WITH THE ENCLOSED EQUIPMENT, RAIN, SNOW AND SLEET.

CONFORMANCE TO APPLICABLE NEC REQUIREMENTS OF COMPONENTS NOT PROVIDED BY VALMONT SHALL BE THE RESPONSIBILITY OF THE CONTRACTOR.

NATIONAL ELECTRIC CODE (NEC) REQUIREMENTS

"CLASSIFIED LABEL": UL1598, CATEGORY IEUR (LUMINAIRE POLES) POLES AT LEAST 12FT TALL BUT LESS THAN 100FT.

LABEL IS AFFIXED 3" ABOVE THE LOWEST HANDHOLE RIM.

DETAIL 2 — UL1598 CATEGORY LABELS

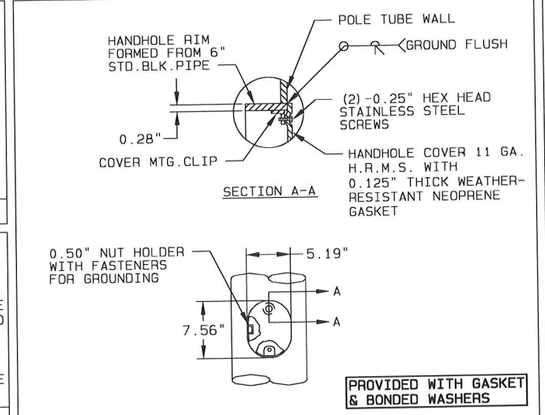

DETAIL 3 — HANDHOLE

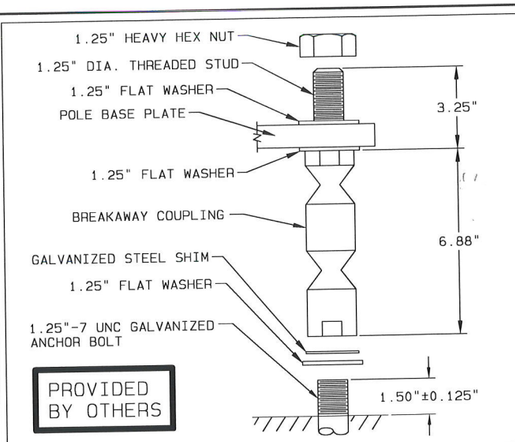

DETAIL 6 — TRANSPO NO.4125 BREAKAWAY COUPLING

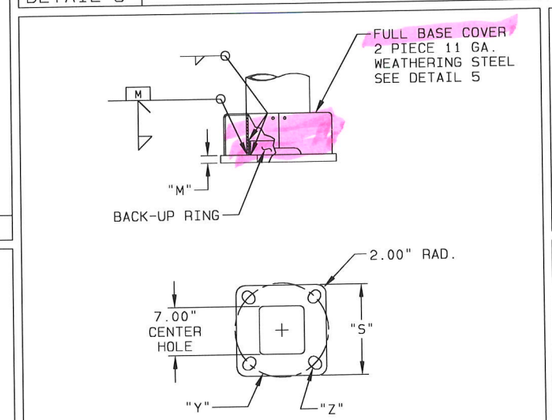

DETAIL 4 — BASE PLATE

(4)-FULLY GALVANIZED ANCHOR BOLTS WITH (3) HEX NUTS AND (2) 2.50" DIAMETER WASHERS PER BOLT.

(2) 0.25" THICK UNFINISHED ANCHOR BOLT TEMPLATE PLATES INCLUDED, SIZED AS SHOWN ON STANDARD 836001-04

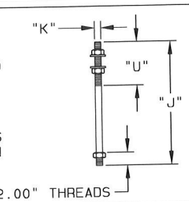

DETAIL 7 — ANCHOR BOLT

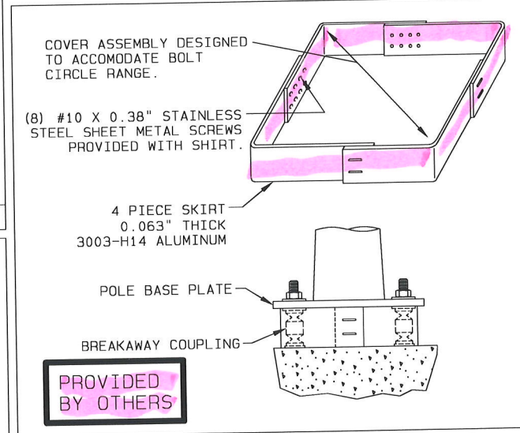

DETAIL 8 — BREAKAWAY COUPLING SKIRT

ALL ANGLES MEASURED CLOCKWISE FROM HAND-HOLE AS VIEWED FROM SMALL END OF POLE

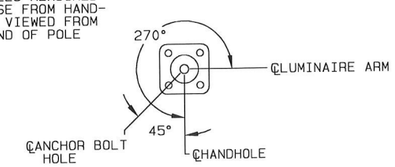

RADIAL INDEX

MATERIAL DATA

COMPONENT	ASTM DESIGNATION	MIN. YIELD (KSI)	COMPONENT	ASTM DESIGNATION	MIN. YIELD (KSI)
POLE SHAFT	A606-TYPE 4	55			
BASE PLATE	A588	50			
ANCHOR BOLTS	F1554 GR.105	105			

POLE AND SIGNAL ARM DATA

ITEM	QTY.	POLE TUBE				POLE BASE				ANCHOR BOLT			LUMINAIRE ARM			NOMINAL LUMINAIRE MOUNTING HEIGHT (FT)
		BASE DIA. (IN)	TOP DIA. (IN)	LENGTH (FT)	GAUGE OR THK. (IN)	SQUARE "S" (IN)	BOLT CIRCLE "Y" (IN)	THK. "M" (IN)	SLOT "Z" (IN)	DIA. "K" (IN)	LENGTH "J" (IN)	THREAD LENGTH "U" (IN)	BASE DIA. (IN)	LENGTH "L" (FT)	GAUGE OR THK. (IN)	
1	15	8.81	4.96	35.00	0.179	16.00	16.00	1.25	1.38 X 1.94	1.25	60.00	9.00	4.96	6.17	0.179	35.00

ANTI-CORROSION COATING

SYSTEM:	CUSTOMER SPECIFIED
BASE COAT:	NONE
PRIME COAT:	AROMATIC URETHANE ZINC RICH
FINISH COAT:	ACRYLIC POLYURETHANE ENAMEL
COLOR:	DARK BRONZE
VALMONT SPEC:	F-552C

EXTERIOR 4'-0" OF SHAFT AT BASE END INCLUDING BASE PLATE & FULL BASE COVER

SYSTEM:	CUSTOMER SPECIFIED
BASE COAT:	NONE
PRIME COAT:	NONE
FINISH COAT:	TNEMEC 46H413 HI-BUILD TNEME-TAR
COLOR:	BLACK
VALMONT SPEC:	F-104

INTERIOR 4'-0" OF SHAFT AT BASE END

NOTE:

1. **STRUCTURE SHOWN SIZED TO MATCH PREVIOUS VALMONT ORDER IL474768P1.**

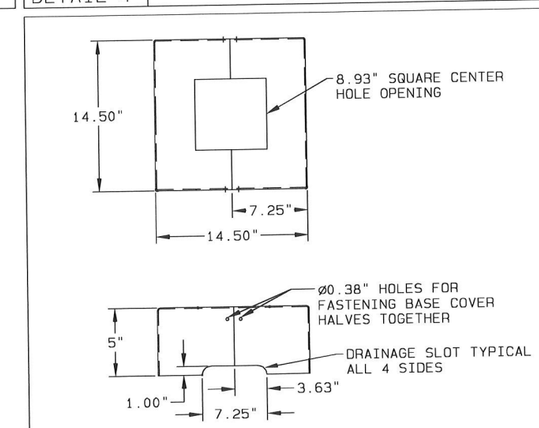

DETAIL 5 — FULL BASE COVER

THE LIGHTING STRUCTURES SHOWN ON THIS DRAWING HAVE BEEN DESIGNED IN ACCORDANCE WITH THE LOADING AND THE NOMINAL STRENGTH REQUIREMENTS OF THE 2015 AASHTO "LRFD SPECIFICATIONS FOR STRUCTURAL SUPPORTS FOR HIGHWAY SIGNS, LUMINAIRES AND TRAFFIC SIGNALS, FIRST EDITION", SLTS-1. THE WIND LOADS WERE CALCULATED FROM AN ULTIMATE WIND VELOCITY OF 120 MPH WITH A MEAN RECURRENCE INTERVAL OF 1700 YEARS.

AASHTO 2015 SPECIFICATIONS

REV	DRAWN BY-DATE	CHECK BY-DATE	DESCRIPTION
C	JDF1 10/03/24	JDF1 10/03/24	REDUCED FBC SIZE, ADDED COUPLING SKIRT
B	JDF1 08/08/24	JDF1 08/08/24	REMOVED BANNER ARM DETAIL
A	JDF1 07/10/24	JDF1 07/11/24	REVISED PER CUSTOMER REQUIREMENTS
—	JDF1 04/01/24	JDF1 04/01/24	— — — — — — — — — — — — — — — — — — — —

SOLD TO: ELECTRICAL RESOURCE MANAGEMENT
SHIP TO: HOME TOWNE ELECTRIC
P.O. #: 742606VSDT
AGENT: LIGHTING SOLUTIONS OF ILLINOIS

JOB: LCDOT-83-LC - BUFFALO GROVE ARLINGTON HTS RD
TITLE: LIGHTING STRUCTURES

VALMONT INDUSTRIES, INC. RESERVES THE RIGHT TO INSTALL VARIOUS, ENGINEER APPROVED, MATERIAL HANGING ACCOMMODATIONS TO FACILITATE THE MANUFACTURING PROCESS.

valmont
Valley, NE 68064
(402) 359-2201

ORDER NUMBER: 609191-P1
PAGE NUMBER: 1 OF 1
DRAWING NUMBER: IL609191P1
REV: C

LITHONIA LIGHTING®

Catalog Number	
Notes	
Type	

CONTOUR SERIES

Soft Square Lighting

KAD

METAL HALIDE: 250-400W
HIGH PRESSURE SODIUM: 150-400W
20'TO 35' MOUNTING

FEATURES & SPECIFICATIONS

INTENDED USE – Ideal for parking areas, street lighting, walkways and car lots.

CONSTRUCTION – Rugged, die-cast, soft corner aluminum housing with 0.12" nominal wall thickness. Die-cast door frame has impact-resistant,tempered, glass lens that is fully gasketed with one-piece tubular silicone.

Finish: Standard finish is dark bronze (DDB) polyester powder finish, with other architectural colors available.

OPTICS – Anodized, aluminum reflectors: IES full cutoff distributions R2 (asymmetric), R3 (asymmetric), R4 (forward throw) and R5S (square) are interchangeable. High-performance anodized, segmented aluminum reflectors IES full cutoff distributions SR2 (asymmetric), SR3 (asymmetric) and SR4SC (forward throw, sharp cutoff). High-performance reflectors attach with tool-less fasteners and are rotatable and interchangeable.

ELECTRICAL – Ballast: High pressure sodium: 250W is high reactance, high power factor. Constant wattage autotransformer for 250-400W. Super CWA (pulse start ballast), DOE 2017 compliant, is required for metal halide 250-400W (SCWA option) for US shipments only. CSA, NOM or INTL required for probe start shipments outside of the US. Ballast is 100% factory-tested.

Socket: Mogul base socket for 250M and above, and 70-400S, with copper alloy, nickel-plated screw shell and center contact. UL listed 1500W, 600V.

LISTINGS – UL Listed (standard). CSA Certified (see Options). UL listed for 25°C ambient and wet locations. IP65 rated in accordance with standard IEC 529.

WARRANTY — 1-year limited warranty. Complete warranty terms located at:
www.acuitybrands.com/CustomerResources/Terms_and_conditions.aspx

Note: Actual performance may differ as a result of end-user environment and application.

Specifications subject to change without notice.

NIGHTTIME FRIENDLY™

Specifications

EPA: 1.2 ft.^{2}

*Weight: 35.9 lbs (16.28 kg)

Length: 17-1/2 (44.5)

Width: 17-1/2" (44.5)

Depth: 7-1/8 (18.1)

All dimensions are inches (centimeters) unless otherwise specified.

*Weight as configured in example below.

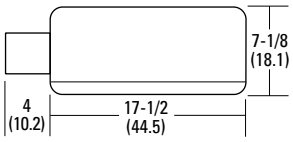

ORDERING INFORMATION For shortest lead times, configure product using **bolded options**.

Example: KAD 400M R3 TB SCWA SPD04 LPI

KAD								
Series	**Wattage**		**Distribution**		**Voltage**	**Ballast**	**Mounting**[9]	
KAD	Metal halide **250M**[1] **400M**[1,2]	High pressure sodium[3] 150S **250S** **400S**	Standard reflectors R2 IES type II asymmetric[4] **R3** IES type III asymmetric[4] **R4** IES type IV forward throw[4] R5S IES type V square	High performance reflectors[5] SR2 IES type II asymmetric[4] SR3 IES type III asymmetric[4] SR4SC IES type IV forward throw	120 208[6] 240[6] **277** **347** **480**[6] **TB**[7] 23050HZ[8]	(blank) Magnetic ballast CWI Contant wattage isolated[8] Pulse Start HID Ballast/Lamp Systems **SCWA** Super CWA pulse-start ballast NOTE: For shipments to U.S. territories, SCWA must be specified to comply with EISA.	Ships in fixture carton **SPD**___ Square pole RPD___ Round pole WBD___ Wall bracket WWD___ Wood or pole wall Ships separately[10,11] DAD12P Degree arm (pole) DAD12WB Degree arm (wall) KMA Mast arm external fitter KTMB Twin mounting bar WBA Decorative wall bracket[12]	Arm length **04** 4" arm 06 6" arm **09** 9" arm 12 12" arm

Options				**Finish**[17]				**Lamp**[18]
Shipped installed in fixture SF Single fuse (120, 277, 347V)[13] DF Double fuse (208, 240, 480V)[13] PD Power tray[14] **PER** NEMA twist-lock receptacle only (no photocontrol) QRS Quartz restrike system[15] QRSTD QRS time delay[15] WTB Terminal wiring block[14]	**CSA** CSA Certified INTL Available MH for probe start shipping outside the U.S. REGC1 California Title 20, effective 1/1/2010 Shipped separately[10] HS House side shield PE1 NEMA twist-lock PE (120, 208, 240V)	PE3 NEMA twist-lock PE (347V) PE4 NEMA twist-lock PE (480V) PE7 NEMA twist-lock PE (277V) SC Shorting cap for PER option VG Vandal guard[16] WG Wire guard[16]	**(blank)** Dark bronze **DWH** White **DBL** Black **DMB** Medium bronze **DNA** Natural aluminum Super Durable Finishes DDBXD Dark bronze DBLXD Black	DNAXD Natural aluminum DWHXD White DDBTXD Textured dark bronze DBLBXD Textured black DNATXD Textured natural aluminum DWHGXD Textured white	**LPI** Lamp included **L/LP** Less lamp

Accessories: Tenon Mounting Slipfitter *(RPDXX required.)*
Order as seperate catalog number. Must be used with pole mounting.

	Number of fixtures					
Tenon O.D.	One	Two@180°	Two@90°	Three@120°	Three@90°	Four@90°
2-3/8"	T20-190	T20-280	T20-290[19]	T20-320[19]	T20-390[19]	T20-490[19]
2-7/8"	T25-190	T25-280	T25-290[19]	T25-320	T25-390[19]	T25-490[19]
4	T35-190	T35-280	T35-290[19]	T35-320	T35-390[19]	T35-490[19]

Notes

1. These wattages require the REGC1 option to be chosen for shipments into California for Title 20 compliance. 250M REGC1 in not available in 347 or 480V.
2. Reduced jacket ED28 required for SR2, SR3 and SR4SC optics.
3. Not available with SCWA.
4. House-side shield available.
5. High performance reflectors not available with QRSTD.
6. Must specify CWI for use in Canada.
7. Optional multi-tap ballast (120, 208, 240, 277V; in Canada: 120, 277, 347V).
8. Consult factory for available wattages.
9. 9" or 12" arm is required when two or more luminaires are oriented on a 90° drilling pattern.
10. May be ordered as an accessory.
11. Must specify finish when ordered as an accessory.
12. Only available with SPD04 and SPD09. Can be ordered as separate line item.
13. Must specify voltage. N/A with TB.
14. Only available with SR2, SR3 and SR4SC optics.
15. Max allowable wattage lamp included.
16. Prefix with KAD when ordered as an accessory.
17. See www.lithonia.com/archcolors for additional color options.
18. Must be specified. L/LP not available with MHC.
19. Must use RPD09 or RPD12.

Coefficient of Utilization ———
Initial Footcandles ———

KAD 400M R2 Test no. 1193083101P

ISOILLUMINANCE PLOT (Footcandle)

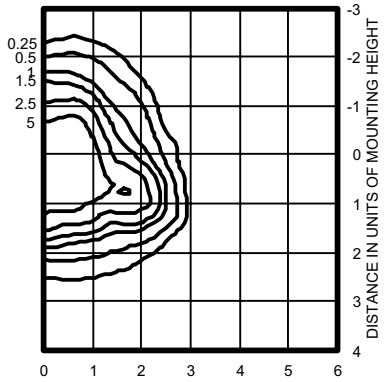

400W pulse start metal halide lamp, rated 38000 lumens. Footcandle values based on 20' mounting height.
Classification: Type II, Short, Full Cutoff

KAD 400M R3 Test no. 1192040902P

ISOILLUMINANCE PLOT (Footcandle)

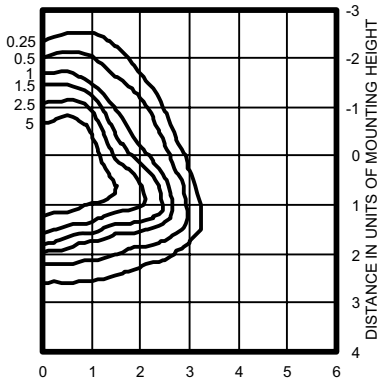

400W pulse start metal halide lamp, rated 38,000 lumens. Footcandle values based on 20' mounting height.
Classification: Type II, Short, Full Cutoff

KAD 400M R4 Test no. 1191110101P

ISOILLUMINANCE PLOT (Footcandle)

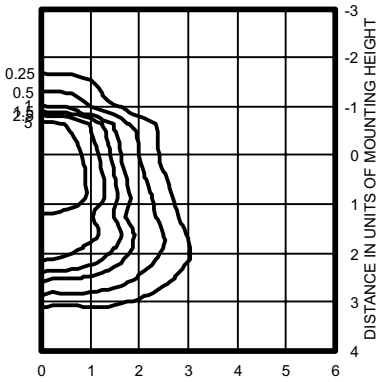

400W pulse start metal halide lamp, rated 38,000 lumens. Footcandle values based on 20' mounting height.
Classification: Unclassified (Type III, Very Short), Full Cutoff

KAD 400M R4HS Test no. 1192061101P

ISOILLUMINANCE PLOT (Footcandle)

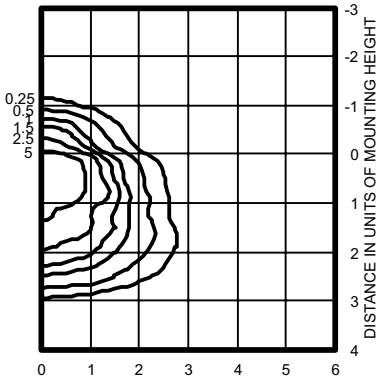

400W pulse start metal halide lamp, rated 38,000 lumens. Footcandle values based on 20' mounting height.
Classification: Unclassified (Type III, Very Short), Full

KAD 400M R5S Test no. 1194040801P

ISOILLUMINANCE PLOT (Footcandle)

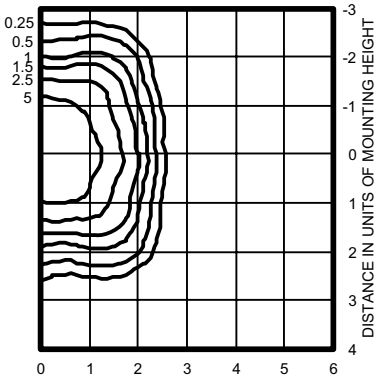

400W pulse start metal halide lamp, rated 38000 lumens. Footcandle values based on 20' mounting height.
Classification: Unclassified (Type NC, Very Short), Full Cutoff

Notes

1 Photometric data for other distributions can be accessed at www.lithonia.com.

2 Tested to current IES and NEMA standards under stabilized laboratory conditions. Various operating factors can cause differences between laboratory data and actual field measurements. Dimensions and specifications on this sheet are based on the most current available data and are subject to change without notice.

3 For electrical characteristics, consult outdoor technical data specification sheets on www.lithonia.com.

Mounting Height Correction Factor

(Multiply the fc level by the correction factor)

25 ft. = 0.64
35 ft. = 0.32
40 ft. = 0.25

$$\left(\frac{\text{Existing Mounting Height}}{\text{New Mounting Height}}\right)^2 = \text{Correction Factor}$$

©2007-2018 Acuity Brands Lighting, Inc. All rights reserved. Rev. 03/05/18

EC
ECobra-head™ LED Street Light

Project
Type
Catalog No.

Luminaire Data

	L	Weight	EPA
EC1	16.1 in [409 mm]	10.8 lb [4.9 kg]	0.40 ft^2
EC3	20.8 in [528 mm]	12.7 lb [5.8 kg]	0.45 ft^2
EC4	23.5 in [597 mm]	14.0 lb [6.3kg]	0.48 ft^2
EC7	30.6 in [777 mm]	19.3 lb [8.8 kg]	0.57 ft^2
EC9	35.4 in [899 mm]	21.3 lb [9.7kg]	0.63 ft^2

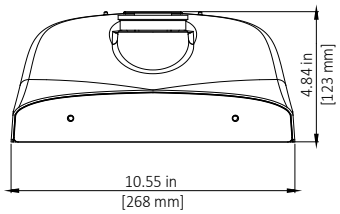

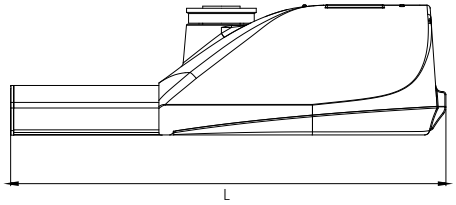

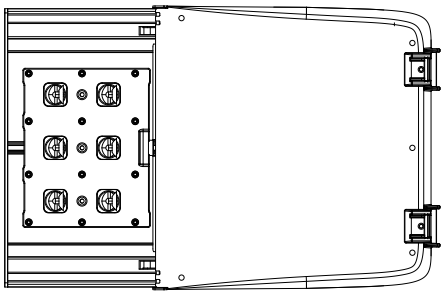

Ordering Information

Sample Catalog No. EC1 4M MV NW 2 GY 700 PCR5 WL

Product & No. & Type of LEDs	Voltage	Nominal Color Temperature[1]	Distribution	Finish[2]	Drive Current[3]	Options
EC1 4M **EC1 6M** **EC3 10M** **EC4 14M** **EC7 18M** **EC7 20M** **EC7 24M** **EC9 30M**	**MV** 120-277V **HV** 347-480V	**NW** 4000K	**2** Type 2 **3** Type 3	**GY** Gray	**350** 350mA **530** 530mA **700** 700mA	**BSK** Bird Spider Kit **SPB** Square Pole Bracket **RPB** Round Pole Bracket **PTB** Pole-Top Bracket **DSC** Door Safety Cable **HSS**[4] House Side Shield **CSS**[5] Cul-de-sac Side Shield **FDC**[6] Fixed Drive Current **LPCR** Less Photocontrol Receptacle **PCR5** ANSI 5-wire Photocontrol Receptacle **PCR7** ANSI 7-wire Photocontrol Receptacle **SC** PCR Shorting Cap **WL** Utility Wattage Label

Notes:
1 4000K standard, consult factory for other color temperatures.
2 Gray standard, consult factory for other finishes.
3 Factory set drive current, field adjustable standard. Refer to performance data on page 3.
4 Flush mounted House Side Shield factory installed, also available for field installation. Shield cuts light off at 1/2 mounting height behind luminaire.
5 Flush mounted Cul-de-sac Shield factory installed, also available for field installation. Shield cuts light off at 1 mounting height on either side of luminaire.
6 Non-field adjustable drive current. Specify 350mA, 530mA or 700mA setting.

© 2014 Leotek Electronics USA
www.leotek.com
EC_v051514 Specifications subject to change without notice

LEOTEK LITE-ON GROUP

EC
ECobra-head™ LED Street Light

Luminaire Specifications

Housing
Die cast and extruded aluminum housing with universal two-bolt slip fitter mounts to 1-1/4" to 2" (1-5/8" to 2-3/8" O.D.) diameter mast arm. Leveling adjustment of +/-5º. Meets ANSI C136.31-2001 Normal Application, Bridge & Overpass, and Caltrans 611 Vibration Standards. Electrical components are accessed without tools and are mounted on a removable power door. Power door features quick electrical disconnects to terminal block and LED board.

Light Emitting Diodes
Hi-flux/Hi-power white LEDs produce a minimum of 95% of initial intensity at 100,000 hours of life. LEDs are tested in accordance with IES LM-80 testing procedures. Mean correlated color temperature of 4000K (standard) and 70 minimum CRI. LEDs are 100% mercury and lead free.

Optical Systems
Micro-lens systems produce IESNA Type 2 or Type 3 distributions. Luminaire produces 0% total lumens above 90º (BUG Rating, U=0). Optional house side shield cuts light off at 1/2 mounting height behind luminaire. Cul-de-sac shield provides back and side light control for end of cul-de-sac applications. Both shields are field installable without tools.

Electrical
Power supply drive current is field adjustable (350mA, 530mA or 700mA). Power supply features a minimum power factor of .90 and <20% Total Harmonic Distortion (THD). EMC meets or exceeds FCC CFR Part 15. Transient voltage complies with ANSI C62.41 Cat. A. Integral surge protector is tested per ANSI/IEEE C62.45 procedures based on ANSI/IEEE C62.41.2 definitions for standard and optional waveforms for Location Category C High. Photocontrol receptacle is standard, ANSI C136.41 5-wire (PCR5) or 7-wire (PCR7) dimming receptacle optional. Photocontrol or control module is provided by others. Power Supply is 0-10V dimmable standard with PCR5 or PCR7 option.

Finish
Housing receives a fade and abrasion resistant, epoxy polyester powder coat, light gray finish standard. Aluminum extruded components are anodized. Meets 3000 hours salt spray test.

Listings/Ratings/Labels
Luminaires are UL listed for use in wet locations in the United States and Canada. Optical systems maintain an IP66 rating. Design Lights Consortium qualified product.

Photometry
Luminaires are photometrically tested by certified independent testing laboratories in accordance with IES LM-79 testing procedures.

Warranty
10-year limited warranty is standard on luminaire and components.

Performance Data
See next page

© 2014 Leotek Electronics USA

EC
ECobra-head™ LED Street Light

Performance Data

All data nominal, consult factory for IES files or LM-79 reports.

			Type 2			Type 3		
No. of LEDs & Type	**Drive Current (mA)**	**System Wattage (W)**	**Delivered Lumens (Lm)**	**Efficacy (Lm/W)**	**BUG Rating**	**Delivered Lumens (Lm)**	**Efficacy (Lm/W)**	**BUG Rating**
EC1 4M	350*	19	1900	100	B1 U0 G1	1800	95	B1 U0 G1
	450	23	2300	100	B1 U0 G1	2200	96	B1 U0 G1
	530	27	2700	100	B1 U0 G1	2500	93	B1 U0 G1
	700	35	3300	94	B1 U0 G1	3100	89	B1 U0 G1
EC1 6M	350	29	3000	103	B1 U0 G1	2900	100	B1 U0 G1
	530	42	4100	98	B1 U0 G1	4000	95	B1 U0 G1
	700	54	5000	93	B1 U0 G1	5000	93	B1 U0 G1
EC3 10M	350	40	4700	118	B1 U0 G1	4500	113	B1 U0 G1
	530	63	6500	103	B2 U0 G2	6500	103	B1 U0 G1
	700	87	8300	95	B2 U0 G2	8300	95	B2 U0 G1
EC4 14M	350	65	6800	105	B2 U0 G2	6800	105	B1 U0 G1
	530	98	9400	96	B2 U0 G2	9400	96	B2 U0 G2
	700	130	11700	90	B2 U0 G2	11700	90	B2 U0 G2
EC7 18M	350	82	8700	106	B2 U0 G2	8600	105	B2 U0 G2
	530	122	12000	98	B2 U0 G2	11900	98	B2 U0 G2
	700	163	15000	92	B2 U0 G2	14800	91	B2 U0 G2
EC7 20M	350	90	9700	108	B2 U0 B2	9600	107	B2 U0 G2
	530	137	13300	97	B3 U0 G3	13200	96	B2 U0 G2
	700	180	16700	93	B3 U0 G3	16500	92	B3 U0 G2
EC7 24M	350	109	11600	106	B3 U0 G3	11500	106	B2 U0 G2
	530	165	16000	97	B3 U0 G3	15800	96	B2 U0 G2
	700	215	20000	93	B3 U0 G3	19700	92	B3 U0 G3
EC9 30M	350	130	14000	108	B3 U0 G3	13800	106	B3 U0 G2
	530	198	19300	97	B3 U0 G3	19100	96	B3 U0 G2
	700	260	24000	92	B3 U0 G3	23700	91	B3 U0 G3

Note:
* DLC qualification for EC1 4M at 350mA limited to 120-240V

© 2014 Leotek Electronics USA

Consistent with LEED® goals & Green Globes™ criteria for light pollution reduction

Autobahn Series ATB2
Roadway Lighting

PRODUCT OVERVIEW

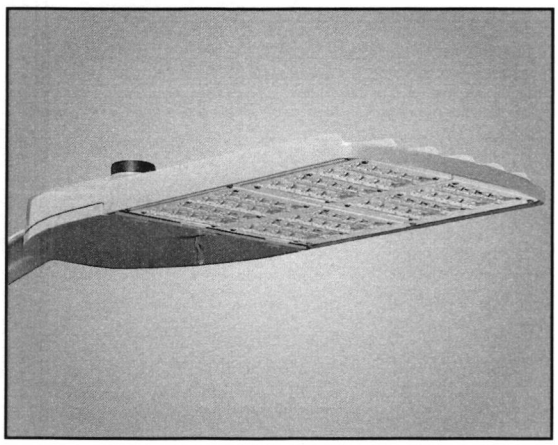

Applications:

Roadways
Off ramps
Residential streets
Parking lots

DIMENSIONS

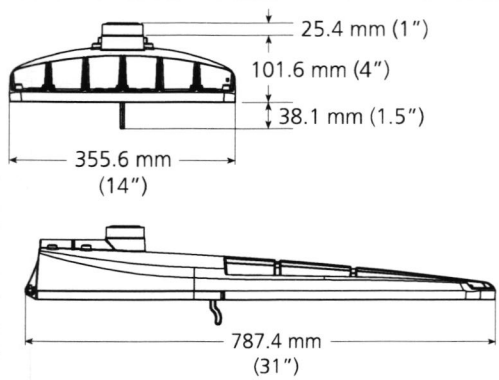

Effective Projected Area (EPA)
The EPA for the ATB2 is 0.78 sq. ft.,
Approx. Wt. = 21 lbs. (9.53 kg)

STANDARDS

DesignLights Consortium® (DLC) Premium qualified product. Not all versions of this product may be DLC Premium qualified. Please check the DLC Qualified Products List at www.designlights.org/QPL to confirm which versions are qualified.

Color temperatures of ≤ 3000K must be specified for International Dark-Sky Association certification.

Rated for -40°C to 40°C ambient.
CSA Certified to U.S. and Canadian standards
Complies with ANSI: C136.2, C136.10, C136.14, C136.31, C136.15, C136.37

GOVERNMENT PROCUREMENT — BAA – Buy America(n) Act: Product with the BAA option qualifies as a domestic end product under the Buy American Act as implemented in the FAR and DFARS. Product with the BAA option also qualifies as manufactured in the United States under DOT Buy America regulations.

BABA – Build America Buy America: Product with the BAA option also qualifies as produced in the United States under the definitions of the Build America, Buy America Act.

Please refer to www.acuitybrands.com/buy-american for additional information.

Note: Specifications subject to change without notice.

Autobahn Series – AEL_0109_ATB2

Features:

OPTICAL

The Autobahn's new molded silicone optics provide exceptional performance. Silicone optics are superior to other polymeric materials in the areas of; optical efficiency, thermal performance, and reduction in dirt accumulation, all of which can lead to long term lumen degradation and a shift in optical distribution. Also, because silicone allows for the molding of fine details as well as thick sections, it produces the most crisp, clean and well-defined lighting distributions available. Silicone optics paired with modern LED's allow the Autobahn to take full advantage of both technologies.

Same Light: Performance is comparable to 400-1000W HPS roadway luminaires.

White Light: Correlated color temperature - 4000K, or optional 2700K, 3000K or 5000K, all 70 CRI minimum.

Unique IP66 rated LED light engines provided 0% uplight and restrict backlight to within sidewalk depth, providing optimal application coverage and optimal pole spacing.

Available in Type II, III, IIIL, IV, & V roadway distributions.

ELECTRICAL

Expected Life: LED light engines are rated >100,000 hours at 25°C, L70. Electronic driver has an expected life of 100,000 hours at a 25°C ambient.

Lower Energy: Saves an average of 40-60% over comparable HPS platforms.

Robust Surge Protection: Two different surge protection options provide a minimum of ANSI C136.2 10kV/5kA protection. 20kV/10kA protection is also available.

Luminaire ships with a 0-10v dimmable driver. Luminaire is continuous and step dimming capable via A0 option or controls installed on P7 photocontrol receptacle option.

MECHANICAL

Easy to Maintain: Includes standard AEL lineman-friendly features such as tool-less entry, 3 station terminal block and quick disconnects. Bubble level located inside the electrical compartment for easy leveling at installation.

Rugged die-cast aluminum housing is polyester powder-coated for durability and corrosion resistance. Rigorous five-stage pre-treating and painting process yields a finish that achieves a scribe creepage rating of 7 (per ASTM D1654) after over 5000 hours exposure to salt fog chamber (operated per ASTM B117).

Four-bolt mast arm mount is adjustable for arms from 1-1/4" to 2" (1-5/8" to 2-3/8" O.D.) diameter and provides a 3G vibration rating per ANSI C136.31.

Wildlife shield is cast into the housing (not a separate piece).

CONTROLS

NEMA 3 Pin photocontrol receptacle is standard, with the Acuity designed ANSI 7 Pin receptacle optionally available.

Premium solid state locking sale photocontrol - PCSS (10 year rated life). Extreme long life sold state locking style photocontrol - PCLL (20 year rated life).

Optional onboard Adjustable Output module allows the light output and input wattage to be modified to meet site specific requirements, and can also allow a single fixture to be flexibly applied in many different applications.

AEL American Electric Lighting

ORDERING INFORMATION

Series

ATB2	Autobahn LED Roadway

LED Performance Package

P601	26,192 lumens nominal	**P901**	30,398 lumens nominal
P602	29,188 lumens nominal	**P902**	36,273 lumens nominal
P603	33,062 lumens nominal	**P903**	41,215 lumens nominal
P604	36,305 lumens nominal	**P904**	45,247 lumens nominal
P605	39,786 lumens nominal	**P905**	50,476 lumens nominal

Voltage

MVOLT	Multi-volt, 120V - 277V
347	347V
480	480V
XVOLT	277V-480V[3]

Optics

R2	Roadway Type II
R3	Roadway Type III
R3L	Roadway Type III Long
R4	Roadway Type IV[2]
R5	Roadway Type V

Options

Color Temperature (CCT)

(Blank)	4000K CCT, 70 CRI Min.
27K	2700K CCT, 70 CRI Min.
3K	3000K CCT, 70 CRI Min.
5K	5000K CCT, 70 CRI Min.

Paint

(Blank)	Gray (Standard)
BK	Black
BZ	Bronze
DDB	Dark Bronze
GI	Graphite
WH	White
GN	Green

Surge Protection

(Blank)	Standard 20kV/10kA SPD
MP	MOV Pack 10kV/5kA

Terminal Block

(Blank)	Terminal Block (Standard)
T2	Wired to L1 & L2 Positions

Misc.

BL	External Bubble Level
HSS	House-Side Shield
NL	Nema Label
XL	Not CSA Certified
HK	Hingekeepers
BAA	Buy America(n) Act and/or Build America Buy America Qualified

Controls.

(Blank)	3 Pin NEMA Photocontrol Receptacle (Standard)
P7	7 Pin Photocontrol Receptacle (Dimmable Driver Included)
NR	No Photocontrol Receptacle
AO	Field Adjustable Output
PCSS	Solid State Lighting Photocontrol (120-277V)[1]
PCLL	Solid State Long Life Photocontrol
SH	Shorting Cap

Packaging

(Blank)	Single Unit (Standard)
JP	Job Pack (42/Pallet)

Accessories:

External House Side Shields

ATB2P60XR2R3LR5HSS	for use with P601 - P605, R2, R3L or R5 distribution
ATB2P60XR3HSS	for use with P601 - P605, R3 distribution
ATB2P60XR4HSS	for use with P601 - P605, R4 distribution
ATB2P90XR2R3LR5HSS	for use with P901 - P905, R2, R3L or R5 distribution
ATB2P90XR3HSS	for use with P901 - P905, R3 distribution

Light Trespass Shield

ATB2ULTS	ATB2 Universal Light Trespass Shield

ATB Decorative Arms (cast aluminum)

ATB2DECOS XX	ATB Decorative Arm for Square Pole Painted to match fixture
ATB2DECOR XX	ATB Decorative Arm for Round Pole Painted to match fixture

Universal Arms (steel)

UMR XX	8" Horizontal Arm for Round Pole, Painted to match Fixture (XX - Paint Color)
UMS XX	8" Horizontal Arm for Square Pole, Painted to match Fixture (XX - Paint Color)
UMR GALV	8" Horizontal Arm for Round Pole, Galvanized
UMS GALV	8" Horizontal Arm for Square Pole, Galvanized

Notes

1. Not available in 347 or 480V.
2. Not available with P901 - P905 performance packages
3. XVOLT option only available with P601 and P602 performance packages

American Electric Lighting
AEL Headquarters, One Lithonia Way, Conyers Georgia 30012
www.americanelectriclighting.com Phone: 1-866-HOLOPHANE
Email: TechSupport-Lighting@AcuityBrands.com
© 2014-2024 Acuity Brands Lighting, Inc. All Rights Reserved. ATB2 Rev. 08/19/24

Warranty Five-year limited warranty. This is the only warranty provided and no other statements in this specification sheet create any warranty of any kind. All other express and implied warranties are disclaimed. Complete warranty terms located at: www.acuitybrands.com/support/warranty/terms-and-conditions

Note: Actual performance may differ as a result of end-user environment and application. All values are design or typical values, measured under laboratory conditions at 25 °C. Specifications subject to change without notice.

Please contact your sales representative for the latest product information.

PERFORMANCE PACKAGE

ATB2	Distribution	Input Watts	2700K		3000K		4000/5000K	
			Lumens	LPW	Lumens	LPW	Lumens	LPW
P601	R2	175	22,828	131	24,280	139	27,200	156
	R3		22,689	130	25,200	144	27,080	155
	R3L		21,844	125	22,513	129	23,761	136
	R4		23,376	135	23,760	136	24,770	143
	R5		23,291	135	23,810	138	24,680	143
P602	R2	196	24,983	126	26,610	135	30,060	152
	R3		24,831	126	27,770	142	30,020	153
	R3L		24,270	124	24,770	126	26,400	135
	R4		25,697	135	26,280	137	27,230	143
	R5		25,489	135	26,270	138	27,010	144
P603	R2	233	28,442	121	30,430	131	34,020	145
	R3		28,269	121	32,760	141	33,990	145
	R3L		27,087	116	28,050	120	29,464	126
	R4		29,359	124	29,800	126	31,110	132
	R5		29,019	125	29,850	127	30,750	132
P604	R2	263	31,060	118	33,130	126	37,050	140
	R3		30,871	118	35,670	136	36,950	141
	R3L		29,369	112	30,541	116	31,946	121
	R4		32,001	125	32,450	126	33,910	132
	R5		31,690	126	32,790	127	33,580	133
P605	R2	295	33,992	115	36,960	125	39,750	135
	R3		33,785	115	38,670	131	39,910	136
	R3L		31,867	108	33,149	112	34,663	118
	R4		34,728	120	35,430	122	36,800	127
	R5		34,681	121	35,130	122	36,750	128
P901	R2	199	27,147	137	28,470	143	30,430	154
	R3		26,982	135	29,040	146	31,350	157
	R3L		26,100	131	26,603	134	28,390	143
	R5		27,698	141	29,020	146	29,350	149
P902	R2	245	32,512	133	35,070	144	38,090	156
	R3		32,314	132	35,600	145	38,970	159
	R3L		31,000	127	31,344	128	33,720	138
	R5		33,171	137	33,740	138	35,150	145
P903	R2	282	37,007	131	39,380	140	42,990	152
	R3		36,782	130	39,540	140	43,580	154
	R3L		35,238	125	35,154	125	38,330	136
	R5		37,758	134	37,860	134	40,010	142
P904	R2	319	40,420	127	43,410	137	47,220	148
	R3		40,175	126	43,600	137	48,170	151
	R3L		38,327	120	38,078	119	41,690	131
	R5		41,240	132	41,420	132	43,700	140
P905	R2	369	44,573	121	48,390	132	52,380	142
	R3		44,303	120	48,560	132	53,940	146
	R3L		42,886	116	42,455	115	46,649	126
	R5		45,477	128	45,390	127	48,190	136

Note: Individual fixture performance may vary. Specifications subject to change without notice.

ATB2	15C	20C	25C	30C	35C	40C
LLD Multiplier	1.02	1.01	1.00	0.99	0.98	0.97

To calculate the LLD for a temperature other than 25°C, multiply the LLD @ 25°C (shown in the performance package table) by the LLD multiplier for the selected temperature.

American Electric Lighting
AEL Headquarters, One Lithonia Way, Conyers Georgia 30012
www.americanelectriclighting.com Phone: 1-866-HOLOPHANE
Email: TechSupport-Lighting@AcuityBrands.com
© 2014-2024 Acuity Brands Lighting, Inc. All Rights Reserved. ATB2 Rev. 08/19/24

Warranty Five-year limited warranty. This is the only warranty provided and no other statements in this specification sheet create any warranty of any kind. All other express and implied warranties are disclaimed. Complete warranty terms located at: www.acuitybrands.com/support/warranty/terms-and-conditions

Note: Actual performance may differ as a result of end-user environment and application. All values are design or typical values, measured under laboratory conditions at 25 °C. Specifications subject to change without notice.

Please contact your sales representative for the latest product information.

PERFORMANCE PACKAGE

LLD @ 25°C									
ATB2	R2, R3 Distributions 3000K & 4000K CCT			R2, R3 Distributions 2700K & 5000K CCT*			R3L, R4, & R5 Distributions Any CCT		
	50k Hours	75k Hours	100k Hours	50k Hours	75k Hours	100k Hours	50k Hours	75k Hours	100k Hours
P601	0.96	0.94	0.93	0.92	0.88	0.85	0.92	0.88	0.85
P602	0.96	0.94	0.93	0.92	0.88	0.85	0.92	0.88	0.85
P603	0.96	0.94	0.93	0.91	0.87	0.84	0.91	0.87	0.84
P604	0.96	0.94	0.93	0.91	0.87	0.83	0.91	0.87	0.83
P605	0.96	0.94	0.93	0.90	0.86	0.82	0.90	0.86	0.82
P901	0.96	0.94	0.93	0.91	0.88	0.84	0.91	0.88	0.84
P902	0.96	0.94	0.93	0.91	0.87	0.83	0.91	0.87	0.83
P903	0.96	0.94	0.93	0.90	0.86	0.82	0.90	0.86	0.82
P904	0.96	0.94	0.93	0.90	0.86	0.82	0.90	0.86	0.82
P905	0.96	0.94	0.93	0.89	0.84	0.79	0.89	0.84	0.79

* Also includes any custom (non-catalog) CCT

American Electric Lighting
AEL Headquarters, One Lithonia Way, Conyers Georgia 30012
www.americanelectriclighting.com Phone: 1-866-HOLOPHANE
Email: TechSupport-Lighting@AcuityBrands.com
© 2014-2024 Acuity Brands Lighting, Inc. All Rights Reserved. ATB2 Rev. 08/19/24

Warranty Five-year limited warranty. This is the only warranty provided and no other statements in this specification sheet create any warranty of any kind. All other express and implied warranties are disclaimed. Complete warranty terms located at: www.acuitybrands.com/support/warranty/terms-and-conditions

Note: Actual performance may differ as a result of end-user environment and application. All values are design or typical values, measured under laboratory conditions at 25 °C. Specifications subject to change without notice.

Please contact your sales representative for the latest product information.

B.U.G. Ratings

ATB2	Distribution	2700K			3000K			4000/5000K		
		B	U	G	B	U	G	B	U	G
P601	R2	3	0	3	3	0	3	3	0	3
	R3	3	0	3	3	0	3	3	0	4
	R3L	3	0	4	3	0	4	3	0	4
	R4	3	0	4	3	0	4	3	0	4
	R5	5	0	3	5	0	3	5	0	3
P602	R2	3	0	3	3	0	3	3	0	3
	R3	3	0	3	3	0	4	3	0	4
	R3L	3	0	4	3	0	4	3	0	4
	R4	3	0	4	3	0	4	3	0	4
	R5	5	0	3	5	0	3	5	0	3
P603	R2	3	0	3	3	0	3	4	0	4
	R3	3	0	4	3	0	4	3	0	4
	R3L	3	0	4	3	0	4	3	0	4
	R4	3	0	5	3	0	5	3	0	5
	R5	5	0	4	5	0	4	5	0	4
P604	R2	3	0	3	4	0	4	4	0	4
	R3	3	0	4	3	0	4	3	0	4
	R3L	3	0	4	3	0	4	3	0	5
	R4	3	0	5	3	0	5	3	0	5
	R5	5	0	4	5	0	4	5	0	4
P605	R2	4	0	4	4	0	4	4	0	4
	R3	3	0	4	3	0	4	3	0	4
	R3L	3	0	5	3	0	5	3	0	5
	R4	3	0	5	3	0	5	4	0	5
	R5	5	0	4	5	0	4	5	0	4
P901	R2	3	0	3	3	0	3	3	0	3
	R3	3	0	4	3	0	4	3	0	4
	R3L	3	0	4	3	0	4	3	0	4
	R5	5	0	3	5	0	4	5	0	4
P902	R2	4	0	4	4	0	4	4	0	4
	R3	3	0	4	3	0	4	3	0	4
	R3L	3	0	5	3	0	5	3	0	5
	R5	5	0	4	5	0	4	5	0	4
P903	R2	4	0	4	4	0	4	4	0	4
	R3	3	0	4	3	0	4	4	0	5
	R3L	4	0	5	4	0	5	4	0	5
	R5	5	0	4	5	0	4	5	0	4
P904	R2	4	0	4	4	0	4	4	0	4
	R3	3	0	4	4	0	5	4	0	5
	R3L	4	0	5	4	0	5	4	0	5
	R5	5	0	4	5	0	4	5	0	4
P905	R2	4	0	4	4	0	4	4	0	5
	R3	4	0	5	4	0	5	4	0	5
	R3L	4	0	5	4	0	5	4	0	5
	R5	5	0	5	5	0	5	5	0	5

American Electric Lighting
AEL Headquarters, One Lithonia Way, Conyers Georgia 30012
www.americanelectriclighting.com Phone: 1-866-HOLOPHANE
Email: TechSupport-Lighting@AcuityBrands.com
© 2014-2024 Acuity Brands Lighting, Inc. All Rights Reserved. ATB2 Rev. 08/19/24

Warranty Five-year limited warranty. This is the only warranty provided and no other statements in this specification sheet create any warranty of any kind. All other express and implied warranties are disclaimed. Complete warranty terms located at: www.acuitybrands.com/support/warranty/terms-and-conditions

Note: Actual performance may differ as a result of end-user environment and application. All values are design or typical values, measured under laboratory conditions at 25 °C. Specifications subject to change without notice.

Please contact your sales representative for the latest product information.

Universal Arms (Steel)

UMR POLE ADAPTOR

RECOMMENDED FOR USE WITH POLES OF 4" DIAMETER OR SMALLER

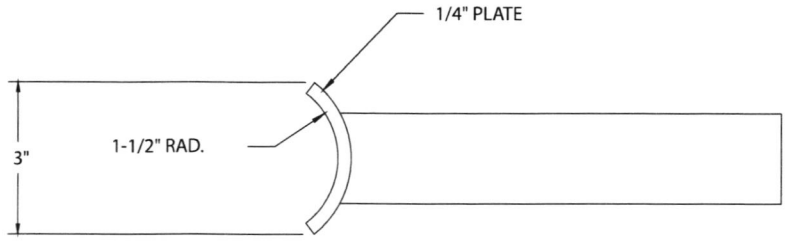

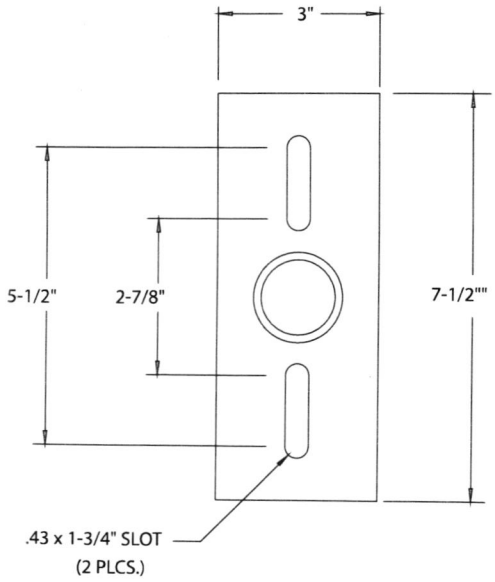

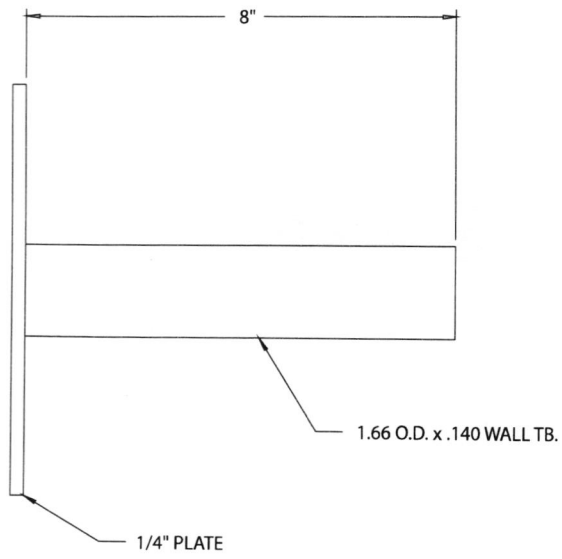

American Electric Lighting
AEL Headquarters, One Lithonia Way, Conyers Georgia 30012
www.americanelectriclighting.com Phone: 1-866-HOLOPHANE
Email: TechSupport-Lighting@AcuityBrands.com
© 2014-2024 Acuity Brands Lighting, Inc. All Rights Reserved. ATB2 Rev. 08/19/24

Warranty Five-year limited warranty. This is the only warranty provided and no other statements in this specification sheet create any warranty of any kind. All other express and implied warranties are disclaimed. Complete warranty terms located at:
www.acuitybrands.com/support/warranty/terms-and-conditions

Note: Actual performance may differ as a result of end-user environment and application. All values are design or typical values, measured under laboratory conditions at 25 °C. Specifications subject to change without notice.

Please contact your sales representative for the latest product information.

ATB Decorative Arms (Cast Aluminum)

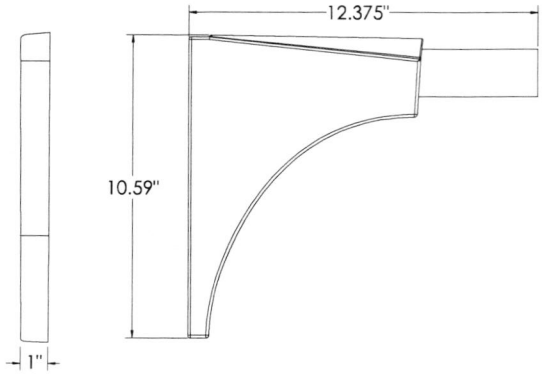

Round Pole Adapter Plate (Supplied with ATB2DECOR)

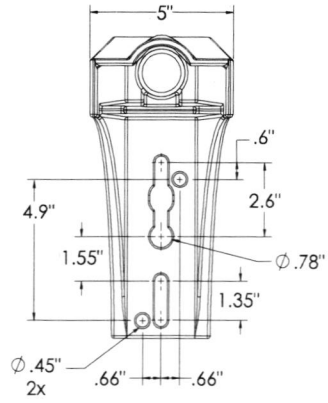

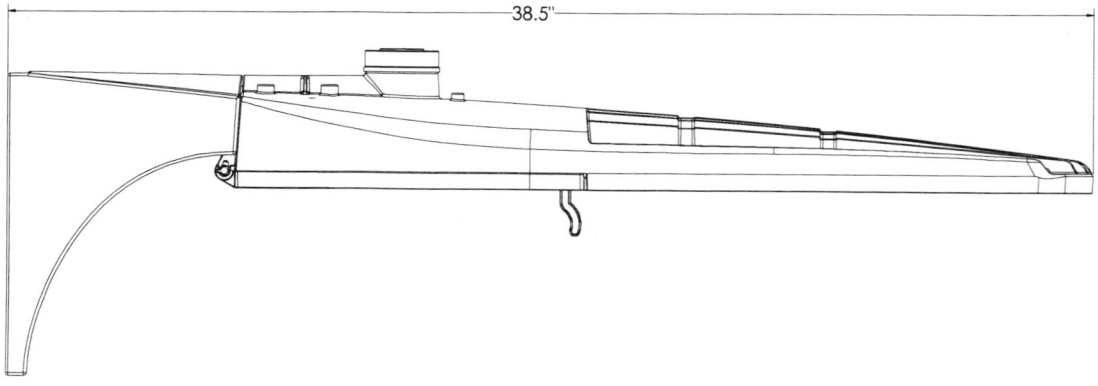

Model	Weight	EPA
ATB2DECOS	6.5 lbs	0.30 ft²
ATB2DECOR	8.0 lbs	0.30 ft²
ATB2DECOS with ATB2 Luminaire	27.5 lbs	0.84 ft²
ATB2DECOR with ATB2 Luminaire	29.0 lbs	0.84 ft²

American Electric Lighting
AEL Headquarters, One Lithonia Way, Conyers Georgia 30012
www.americanelectriclighting.com Phone: 1-866-HOLOPHANE
Email: TechSupport-Lighting@AcuityBrands.com
© 2014-2024 Acuity Brands Lighting, Inc. All Rights Reserved. ATB2 Rev. 08/19/24

Warranty Five-year limited warranty. This is the only warranty provided and no other statements in this specification sheet create any warranty of any kind. All other express and implied warranties are disclaimed. Complete warranty terms located at: www.acuitybrands.com/support/warranty/terms-and-conditions

Note: Actual performance may differ as a result of end-user environment and application. All values are design or typical values, measured under laboratory conditions at 25 °C. Specifications subject to change without notice.

Please contact your sales representative for the latest product information.

CONTRACT EXHIBIT B- SCHEDULE OF PRICES

[Insert Schedule of Prices]

EXHIBIT B – SCHEDULE OF PRICES

Name of Bidder: Integral Power Atlantic, LLC

Address of Bidder: 2658 Corporate Parkway

City Algonquin State IL Zip 60102

Telephone (847) 531-0559

Email Address: estimating@ipatlantic.com

The Bidder declares, represents and warrants that it has read and agrees to abide by the terms, conditions and obligations set forth in the Invitation to Bid. In particular, the Bidder declares, represents and warrants that it has informed itself of all the conditions under which the Work is to be performed including, but not limited to, and where applicable, the conditions of the ground, and building codes. Bidder waives any right to additional compensation for failure to make itself aware of the afore-mentioned conditions.

Bidder further declares that if their Bid Proposal is accepted, that Bidder will enter into the Contract in the same form as set forth in the Bid and Contract Documents. However, Bidder may request changes to the Contract by submitting with this Schedule of Prices a list of requested changes to the Contract.

If this bid is accepted, and the undersigned fails to (**i**) contract as aforesaid, (**ii**) provide the Performance Bond required by the Contract, and (**iii**) provide all insurance required under the Contract within fifteen (15) calendar days after the date of the award of the Contract then the Village, at its option, may determine that the bidder has abandoned this Bid, and thereupon this Bid and the acceptance thereof shall be null and void, and such security accompanying this Bid shall be forfeited and shall be the property of the Village of Buffalo Grove not as penalty, but as liquidated damages.

Description	**Unit**	**Est.Qty.**	**Unit Cost**	**Extended Cost**
LABOR				
1. Journeyman (x 1.0)	Per hour	500	$132.63	$66,315.00
1.a Journeyman Overtime (x 1.5)	Per hour	25	$198.95	$4,973.75
1.b Journeyman Doubletime (x 2.0)	Per hour	15	$265.26	$3,978.90
	SUB TOTAL			**$** 75,267.65
EQUIPMENT				
2. Utility truck	Per hour	150	$26.80	$4,020.00
3. Pole Set truck	Per hour	100	$55.23	$5,523.00
4. Aerial truck	Per hour	275	$50.00	$13,750.00
5. Backhoe	Per hour	16	$26.80	$428.80
6. Auger	Per hour	10	$ 55.23	$ 552.30
7. Trencher	Per hour	10	$ 46.50	$ 465.00
8. Directional Boring Rig	Per hour	10	$108.00	$1080.00
9. Arrow Board truck / trailer	Per hour	100	$35.47	$3,547.00
	SUB TOTAL			**$** 29,366.10

MATERIALS				
10. 70W HPS Lamp	Each	5	$24.60	$ 123.00
11. 100W HPS Lamp	Each	25	$21.06	$ 526.50
12. 250W HPS Lamp	Each	100	$13.16	$ 1,316.00
13. 310W HPS Lamp	Each	5	$ 52.66	$ 263.30
14. 400W HPS Lamp	Each	5	$ 52.66	$263.30
15. Photo Cell	Each	100	$ 15.72	$ 1,572.00
16. Igniter	Each	5	$22.22	$ 111.10
17. HPS Ballast	Each	100	$ 145.90	$ 14,590.00
18. Fuse Holder	Each	100	$8.75	$ 875
19. Fuse	Each	100	$2.44	$ 244.00
20. Leotek EC1-6-M-MV-NW-2-530-DB	Each	5	$2.84	$ 14.20
21. LITHONIA KAD 70S R3TB	Each	5	$7.54	$ 37.70
22. LITHONIA KAD 100S R3TB	Each	5	$ 7.54	$ 37.70
23. LITHONIA KAD 250S R3TB	Each	5	$ 7.87	$ 39.35
24. LITHONIA KAD 320S R3TB	Each	5	$1,028.00	$ 5,140.00
25. LITHONIA KAD 400S R3TB	Each	5	$ 1,040.00	$ 5,200.00
26. HOLOPHAN ATB2-P601 LED Fixture	Each	10	$ 400	$ 4,000
27. Centrecon MEO 7 Concrete Pole, Type A	Each	5	$3,497.00	$ 17,485.00
28. Centrecon MEO 8.5 Concrete Pole, Type B	Each	5	$3,895.00	$19,475.00
29. Funk-Linko Corten Pole w/Base Cover (35 foot – Single Davit)	Each	5	$1,567.00	$ 7,835.00
30. Funk-Linko Corten Pole w/Base Cover (40 foot – Twin Davit)	Each	5	$130.00	$ 650.00
31. Funk-Linko Corten Pole w/Base Cover (34.5 foot – Twin Davit)	Each	5	$130.00	$ 650.00
32. Pole Numbering Per IDOT Standards with Plaque and hardware	Each	5	$49.33	$ 246.65
33. Fixture Numbering Per Village Standards	Each	10	$18.50	$ 185.00
34. Aluminum Davit Arm – (8 foot)	Each	5	$691.00	$ 3,455.00
35. Full-height Corten Base Cover	Each	10	$ 548	$ 5,480.00
36. Aluminum Skirt Replacement	Each	5	$ 85.00	$ 425.00
37. Breakaway Couplings (Set of 4) for Corten Pole	Each	20	$444.00	$ 8,880.00
38. Concrete Pole Foundation, 24-inch Diameter	Per foot	5	$200.00	$ 1,000.00
39. Concrete Foundation Extender	Each	5	$410.00	$ 2,050.00
40. #6 RHH, RHW, USE-XLP, 600V	Per foot	500	$1.40	$ 700.00
41. #8 RHH, RHW, USE-XLP, 600V	Per foot	1500	$ 0.88	$1,320.00
42. 2-inch GRC Conduit	Per foot	30	$13.23	$ 396.90
43. 2-inch IMC Conduit	Per foot	30	$ 7.61	$ 228.30
44. 2-inch Schedule 80 PVC Conduit	Per foot	30	$ 2.31	$ 69.30
45. 3M Scotchcast Splicing Kit	Each	30	$ 78.00	$ 2,340.00
	SUB TOTAL			**$** 107,224.30
INSPECTION/RELAMPING				

46. Unit price to inspect street lights/pole	Each	600	$101.00	$60,600.00
47. Unit price to re-lamp street lights	Each	250	$143.00	$35,750.00
	SUB TOTAL			**$**96,350.00
Total Bid Price Per Year				**$** 308,208.05

EXHIBIT B – SCHEDULE OF PRICES (cont.)

Note 1: Re-lamping shall include replacing lamp, cleaning lens, adjusting fixture, inspecting pole, cleaning space between base plate and top of foundation and documenting actions taken on an Inspection Report (See Appendices). Contractor shall also record the Pole # and Date Changed on the new lamp wrapper and turn in all lamp wrappers thus marked with his Inspection Reports.

Note 2: Inspection Only shall include, cleaning lens, adjusting fixture, inspecting pole, cleaning space between base plate and top of foundation and documenting actions taken on an Inspection Report (See Appendices).

Note 3: **Est. Qty.** The Estimated Quantity provided is per calendar year.

BID SECURITY

Along with the Bid Proposal, each bidder must submit with its Bid Proposal a bank draft, cashier's check, certified check or bid bond equal to at least ten percent (5%) of the Total Contract Price, as set forth in their Schedule of Prices (the "**Bid Security**").

EXHIBIT C – SUBCONTRACTOR AND REFERENCES

SUBCONTRACTOR LISTING

Bidder, to employ the following listed subcontractors for the following enumerated classes of work and is not to alter or add to such list without the written consent of the Village.

	SUBCONTRACTOR	CLASS OF WORK
1.	N/A	N/A
2.		
3.		
4.		

ACKNOWLEDGEMENT OF ADDENDA

Acknowledgement of receipt of Addenda(s) N/A (list each addendum number)

Attach each signed addendum, if any, to the bid packet as part of your submittal.

CONTRACTOR SIGNATURE and CONTACT INFORMATION

2/19/2025
Date

(847) 531-0559
Phone

Integral Power Atlantic, LLC
Legal Entity

estimating@ipatlantic.com
E-mail

Joseph Doyle
(Sign here)

Joseph Doyle
(Print Name)

AGENDA ITEM SUMMARY

BUFFALO GROVE VILLAGE BOARD

Regular Meeting: March 17, 2025

AGENDA ITEM 9.g. O-2025-50
Ordinance Authorizing the Purchase of one Department of Public Works Fleet Vehicle from JX Truck Center

Contacts

Liaison: Trustee Stein
Staff: James Warnstedt

Staff Recommendation

Staff recommends approval.

Recommended Motion

I move to approve an ordinance authorizing the purchase of one 2025 Peterbilt 567 Dump Truck from JX Truck Center in an amount not to exceed $231,413.14, subject to final review and approval by the Village Attorney.

Summary

Recommendation

Staff recommends the Village Board authorize the Village Manager to purchase one 2025 Peterbilt 567 dump truck from JX Truck Center, through the Sourcewell purchasing cooperative contract # 68648 in accordance with the Illinois Joint Purchasing Act (30 ILCS 525/0.01 et seq.), for a total not to exceed amount of $231,413.14, subject to final review and approval by the Village Attorney.

Background

Unit 436, a 2015 Ford F-450, with 31,985 miles is due for replacement. This unit's budgeted replacement cost of $234,000 has been split evenly between fiscal years 2025 ($117,000.00) and 2026 ($117,000.00). This unit will be procured through the Sourcewell purchasing cooperative group. The unit is fully funded in the capital reserve and the old unit will be sold for asset recovery. The Utility Division currently operates three primary vehicles for hauling equipment and materials to and from excavation sites. The lead vehicle in this fleet is truck 454, a full-size dump truck with a hauling capacity of 10,000 pounds. This truck also serves as the only vehicle capable of towing the Village's primary excavation machine, the Bobcat E50 compact excavator. The other two vehicles, truck 456 and truck 436, are one-ton dump trucks with a hauling payload capacity of 2,000 pounds each. The utility team performs over seventy-five excavations annually, with each excavation requiring approximately 36,000 pounds of spoils to be hauled away and gravel to be brought in for backfill. Having a truck with greater

capacity will create operational efficiencies, reduce the number of transport trips and reduce maintenance and fuel costs, while also providing a second unit capable of towing the primary excavation equipment.

Although budgeted over FY25 & FY26, it is likely that this unit will be completed and delivered in FY25 based on chassis availability and expected build time. The total cost for the vehicle will be funded in 2025 and funds will no longer need to be budgeted for the vehicle in 2026. Per Finance Department, there are adequate cash reserves to make the purchase this year.

Strategic Alignment

Guiding Principle

Principle 1: Financially Responsible and Sound

Goal

Goal 1: Maintained effective village government: fiscally responsible and providing outstanding, responsive services

File Attachments

1. Department of Public Works Fleet Replacement Ordinance - Utilities 2025
2. JX Peterbilt

smart. with heart.
50 Raupp Blvd, Buffalo Grove, IL 60089 847-459-2500 vbg.org

ORDINANCE 2025-xxx

AN ORDINANCE AUTHORIZING THE PURCHASE OF ONE (1) DEPARTMENT OF PUBLIC WORKS FLEET VEHICLE FROM JX TRUCK CENTER

WHEREAS, the Village of Buffalo Grove is a home rule unit pursuant to the Illinois Constitution of 1970; and

WHEREAS, the Village is a member of the Sourcewell Purchasing Cooperative and

WHEREAS, the Village may make purchases in accordance with Illinois Governmental Joint Purchasing Act (30 ILCS 525/0.01 et seq.)

WHEREAS, the Sourcewell Cooperative engaged in a competitive procurement process to obtain the best value for money.

NOW THEREFORE BE IT ORDAINED by the President and Board of Trustees of the Village of Buffalo Grove, Cook and Lake Counties, Illinois, as follows:

SECTION 1. The foregoing recitals are hereby adopted and incorporated and made a part of this Ordinance as if fully set forth herein.

SECTION 2. The Village Board has authorized the Village Manager to purchase one (1) 2025 Peterbilt 567 Dump Truck from JX Truck Center, in an amount not to exceed $231,413.14, subject to final review and approval by the Village Attorney.

SECTION 3. If any section, paragraph, clause or provision of this Ordinance shall be held invalid, the invalidity thereof shall not affect any other provision of this Ordinance.

SECTION 4. This Ordinance shall be in full force and effect from and after its passage and approval and shall not be codified.

AYES: _____
NAYES: _____
ABSENT: _____
PASSED: _____, 2025
APPROVED: _____, 2025
PUBLISHED: _____, 2025

ATTEST:

_____
Janet M. Sirabian, Village Clerk

APPROVED:

_____
Eric N. Smith, Village President

DRAFT

smart. with heart.
50 Raupp Blvd, Buffalo Grove, IL 60089 847-459-2500 vbg.org

QUOTE

Peterbilt of Wisconsin, Inc. dba JX Truck Center
42400 Hwy 41
Wadsworth IL 60083
(262) 709-3347

Date:	02/28/2025
Quote #:	DE-10041
Type:	Cash
Salesperson:	Todd Peterson
PO #:	

VILLAGE OF BUFFALO GROVE
1650 LEIDER LANE
BUFFALO GROVE Il 60089
P:(224) 275-0421

Stock#: 567 MX dump	**VIN:567 dump chassis**	**2026 PETERBILT 567**	**Price:**	**$229,346.14**
		Peterbilt Base 3/100K		$1,513.00
			Per Unit:	**$230,859.14**

Total Price	**$230,859.14**
Documentation Fee	$367.00
Title Fee	$165.00
Plate Fee	$8.00
IL ERT Fee	$14.00
Total	**$231,413.14**

Sourcewell # 68648
Includes Bonnell Dump Body $73,861.15
Peterbilt Base 3/100K warranty
Peterbilt sourcewell #032824-PMC

Pblt Of Northern Illinois (P125)
42400 Highway 41
Wadsworth, Illinois 60083

Village Of Buffalo Grove
51 Raupp Rd
Buffalo Grove, Illinois 60089
United States of America

Todd Peterson
Cell Phone:
Office Phone: 847-395-7222
Email: tpeterson@jxe.com

Josh Wallace
Cell Phone: 224-275-0421

Vehicle Summary

Unit

Model:	Model 567
Type:	Full Truck
Description 1:	567 chassis dump 132CA
Description 2:	567 Dump 132 CA MX

Application

Intended Serv.:	Construction Dump - On/Off Highway
Commodity:	Construction Materials

Body

Type:	End Dump
Length (ft):	16
Height (ft):	12
Max Laden Weight (lbs):	5000

Trailer

No. of Trailer Axles:	0
Type:	
Length (ft):	0
Height (ft):	0
Kingpin Inset (in):	0
Corner Radius (in):	0

Restrictions

Length (ft):	40
Width (in):	102
Height (ft):	13.5

Chassis

Fr Axle Load (lbs):	20000
Rr Axle Load (lbs):	40000
G.C.W. (lbs):	100000
Road Conditions:	
Class A (Highway)	100
Class B (Hwy/Mtn)	0
Class C (Off-Hwy)	0
Class D (Off-Road)	0
Maximum Grade:	6
Wheelbase (in):	219
Overhang (in):	65
Fr Axle to BOC (in):	86.2
Cab to Axle (in):	132.8
Cab to EOF (in):	197.8
Overall Comb. Length (in):	313

Special Req.

Approved by: _____ **Date:** _____

Note: All sales are F.O.B. designated plant of manufacture.

Sales Code	Std/ Opt	Description	$ List	Weight
Base Model				
0005671	S	**Model 567** The Model 567 is available in both a set-forward and set-back front axle configuration to provide customers with maximum versatility for their application requirements. For weight-sensitive applications, the set-forward front axle provides optimized weight distribution and compliance with bridge laws. The Model 567 has steer axle ratings up to 22,000 lbs. The 567 also offers single, tandem or tridem drive axles and a variety of lift axles for added versatility. Available with a 115" or 121" BBC and as a day cab or with a selection of detachable sleeper configurations, the 567 is as versatile as it is reliable.	210,013	**14,800**
0091070	O	**Construction Materials**	0	**0**
0093060	O	**Construction Dump - On/Off Highway** Truck or tractor without liftable trailing axle which carries bulk materials (excavated earth, sand/gravel, asphalt, demolition debris, etc.) and unloads by dumping out the back, over the side of the body, or out the bottom of the trailer.	0	**0**
0095170	O	**End Dump**	0	**0**
0098170	S	**United States Registry** Canadian Registry PackageRequires Air Conditioning Excise Tax Canada, Speedometer to be KPH ipo MPH, Daytime Running Lights and Rubber Battery Pad in Bottom of Battery Box.	0	**0**
Configuration				
0200700	S	**Not Applicable** Secondary Manufacturer	0	**0**
Frame & Equipment				
0519180	O	**11-5/8" Steel Rails to 444"** 11.625 x 3.874 x .375 Dimension, 2,568,000 RBM; Yield Strength: 120,000 psi. Section Modulus: 21.4 cubic inches. Weight: 1.91 lbs/inch pair	1,717	**387**
0611250	O	**Heavy-Duty Iron Front Spring Brackets** With Front Air Leaf the front spring bracket is iron but not the shackle bracket	460	**35**
0611330	O	**Zinc Coated Anti Corrosion Treated Frame Rails** Requires Frame Rail Code. Zinc Phosphate coating will replace the standard frame rail primer and provide added corrosion prevention for your customer's operating in severe conditions or in climates where vehicle rust is common.	387	**4**
0611790	S	**Aluminum Frame Rail Crossmembers** Excludes suspension	0	**0**
0644090	O	**EOF Square without Crossmember** End-of-frame square without crossmember. For use with body builder installed crossmember.	59	**-64**
0651090	O	**Omit Rear Mudflaps and Hangers**	-58	**-25**

Sales Code	Std/ Opt	Description	$ List	Weight
Front Axle & Equipment				
1011890	O	**PACCAR FX-20 Steer Axle 20,000 lbs. 4" Drop** Axle is designed for applications with a gross axle weight rating (GAWR) of 20,000 pounds. Front axle is designed for demanding applications such as construction, heavy haul, refuse, and other vocational uses. Robust forged steel beam construction for long-lasting performance. It utilizes innovative tapered kingpin roller bearings for more efficient operation and improved steering efficiency. The PACCAR Steer Axle comes standard with the PACCAR warranty of 5 years, 750,000 miles.	2,795	137
1114030	O	**Taper Leaf Springs, Shocks 20,000 lb** Standard with Heavy Resistance Shocks.	927	119
1243020	O	**Power Steering Sheppard SD110 Dual Gear** Steering vocational and heavy haul vehicles with front axle ratings of 16,000 to 18,000 lbs. in single gear applications. Glidekote splines on steering shaft extend service life of components.	2,042	143
1250250	O	**Power Steering Reservoir Frame Mounted w/Cooler** A power steering cooler helps reduce the heat of the power steering fluid. This is commonly used with systems that may experience more stress from towing or off-road driving.	195	2
1354850	O	**PHP10 Iron PreSet PLUS Hubs - Air Disc** Preset iron hub assemblies are designed for demanding conditions and require less maintenance while stilll overing dependability and superior performance. Precisely engineered to minimize roller stress under heavy loads and increase bearing life when used in demanding conditions such as wide-based single wheels and misalignment due to spindle wear.	-158	42
1380070	O	**Greasable Front Spring Pins**	70	0
1380290	O	**Bendix Air Disc Front Brakes** Bendix air disc front brakes use a floating caliper design to provide foundation braking on all axles and complies with reduced stopping distance regulations.	0	0
1380380	S	**Tenneco Shocks For Steer Axle** Integrated front suspension to suit heavy duty truck market, combining the air spring and the damper into one module.	0	0
1380490	O	**PACCAR FX Wide Track IPO Standard** 71in KPI IPO 69in front axle for improved turning radius.	0	15
Rear Axle & Equipment				
1523300	O	**Dana Spicer DSP41 40,000 lb** Interaxle diff lock air rocker occupies space of one gauge. Laser factory axle alignment to improve handling & reduce tire wear. Magnetic rear axle oil drain plug captures & holds any metal fragments in drive axle lube to extend service life. Parking brakes on all drive axles for optimal performance. Cognis EMGARD® FE 75W-90 synthetic axle lube provides over 1% fuel economy improvement. Reduces wear & extends maintenance intervals, resulting in increased uptime. Provides	565	142

Sales Code	Std/ Opt	Description	$ List	Weight
		improved fluid flow to protect components in extreme cold conditions & withstand the stress from high temperatures, extending component life.		
1616305	O	**PHP10 Iron Preset + Hubs - Air Disc**	1,687	0
1616310	O	**Severe Service Disc Brake Rotor** Severe Service Disc Brake Rotor for refuse applications.	-142	14
1680470	O	**Lube Pump, Drive Axle(s)** Used to circulate oil within the axle housing. Recommended for use on 46,000 or greater axles used in refuse or severe service applications.	473	36
1680500	O	**SBM Valve** Full trucks require a spring brake modulation (SBM) system for emergency braking application. This system requires an SBM valve and a relay valve with spring brakes on the rear axles. The SBM valve allows the foot valve to operate the rear axle spring brakes if a failure exists in the rear air system.	282	0
1680570	O	**Bendix ESP Electronic Stability Program With ATC** Truck, end dump or roll-off 20-30 yard only (requires body manufacturer code). Model 367 set-forward front axle requires 170"-311" wheelbase. Model 365 set-forward front axle and set-back front axle requires 170"-311" wheelbase. Model 348 requires 170" - 311" for tandem axle. System provides added stability and traction by applying brakes when excessive wheel slip or critical stability threshold is detected. This system is ideally suited for this application due to the high center of gravity loads typical for dump trucks and the risk of rollovers.	3	0
1682710	S	**Anti-Lock Braking System (ABS) 6S6M** ABS-6. Includes air braking system.	0	0
1683245	S	**Tire Pressure Monitoring System**	0	0
1684200	S	**Synthetic Axle Lubricant All Axles** Peterbilt heavy duty models include Fuel Efficient Cognis EMGARD FE75W-90 which provides customers performance advantages over current synthetic lubricants with reduced gear wear and extended maintenance intervals, resulting in increased uptime. In addition, the lubricant provides improved fluid flow to protect gears in extreme cold conditions and withstand the stress from high temperatures, extending component life.	0	0
1687040	O	**Air Disc Rear Brakes, Tandem Drive Axle** Includes Automatic Slack Adjusters.	358	0
1687090	O	**Diff Lock Tandem Axles** With Speed Interlock. Automatically Disengages Wheel Diff Lock at Speeds Above 25 mph.	2,001	60
1703700	O	**Ratio 3.70 Rear Axle**	0	0
1821800	O	**Peterbilt Air Trac 40,000 lbs, 52in Axle Spacing** Light Weight	473	170
1920385	O	**Air Springs, Internal Bumpers** Air Trac / Air Leaf suspensions	59	0
1920450	O	**Locate Single Leveling Valve Forward Drive Axle** of Peterbilt Air Suspension (not avail with Low Air Leaf Susp or Low Low Air Leaf Susp)	27	0

Sales Code	Std/ Opt	Description	$ List	Weight
1922260	O	**Dash Mtd Dump Switch with Indicator Light** Dash mounted dump switch with indicator light for suspension.	60	**2**
1922390	O	**Heavy-Duty Tracking Rods** For use with Peterbilt Air Leaf or 40,000 lb Air Trac (standard on Low Air Leaf, Low Low Air leaf or 44,000 lb Air Trac).	159	**11**

Engine & Equipment

2075810	S	**PACCAR MX-13 455@1600 GV@2200 1650@900** (2024 Emissions) N20700 AA003 68....CC MAX TARGET SPEED N20800 AA004 10....CC MIN ENABLE SPEED N22000 AA005 OFF...DYNAMIC CC ENABLE N20830 AA006 MT....MULTI TORQUE IN CC N21930 AA009 0.....DRIVER REWARD VEH SPD BONUS N21940 AA010 -5....DRIVER REWARD VEH SPD PNLTY N21920 AA013 BOTH..OFFSET MODE N21950 AA015 3.....MIN SPEED FOR DR SHIFT AID N21960 AA016 1.....DSA LOWEST ACTV GEAR N21970 AA017 10....DSA HIGHEST ACTV GEAR N21640 AA019 YES...EIST PARK BRAKE RESET ENABLE N21910 AA022 30....EIST LO CLNT TEMP OVRRDE N20870 AA023 80....EIST HI AMBAIR TEMP OVRRDE N20860 AA024 39....EIST LO AMBAIR TEMP OVRRDE N20900 AA025 5.....EIST PTO MAX IDLE TIME N20840 AA026 5.....EIST PARKED MAX IDLE TIME N20850 AA027 5.....EIST STANDSTILL IDLE TIME N20910 AA029 NO....EIST RESET FROM ENG LOAD N21170 AA030 NO....EIST OVERRIDE FROM ENG LOAD N21190 AA031 0.....EIST EXPIRATION DISTANCE N21230 AA032 YES...EIST ACCEL PEDAL RESET N21240 AA033 YES...EIST SERVICE BRK RESET N21250 AA034 YES...EIST CLUTCH PEDAL RESET N21260 AA035 YES...EIST PTO OVERRIDE N20770 AA037 4.....DSL SPD OFFSET N20760 AA038 2.....AUTO RTRDR VEH SPD OFFSET N20750 AA039 0.1...TIME DELAY FOR RTRDR ACT N20940 AA042 1900..FIC MAX ENG SPEED N22080 AA043 CNCL..CAB/REM: CUSTOM PRESET 1 FUN N22090 AA044 750...CAB/REM: CUSTOM PRESET 1 N22100 AA045 CNCL..CAB/REM: CUSTOM PRESET 2 FUN N22110 AA046 850...CAB/REM: CUSTOM PRESET 2 N22120 AA047 CNCL..CAB/REM: CUSTOM PRESET 3 FUN N22130 AA048 950...CAB/REM: CUSTOM PRESET 3 N22010 AA049 CNCL..CAB: CUSTOM PRESET 1 FUNC N22020 AA050 0.....CAB: CUSTOM PRESET 1 N22030 AA051 CNCL..CAB: CUSTOM PRESET 2 FUNC N22040 AA052 0.....CAB: CUSTOM PRESET 2 N22050 AA053 CNCL..CAB: CUSTOM PRESET 3 FUNC N22060 AA054 0.....CAB: CUSTOM PRESET 3 N20990 AA055 ON A..CAB: CLUTCH INTLK	0	**0**

Sales Code	Std/ Opt	Description	$ List	Weight
		N21010 AA058 ON A..CAB: PARK BRK INTLK N21030 AA057 ON A..CAB: NEUTRAL INTLK N21150 AA059 ON A..SER BRK INTLK: NO PTO N21130 AA060 OFF...CAB: PRESET +/- SWITCH TYPE N21180 AA061 2000..CAB: MAX ENG SPD- ACCEL CTRL N21120 AA062 2000..CAB: MAX ENG SPD- SW CTRL N21020 AA063 6.....CAB:MAX VEH SPEED N21200 AA064 650...CAB: MIN ENG SPD N21220 AA065 800...CAB: DEDICATED PRESET (-) N21270 AA066 900...CAB: DEDICATED PRESET (+) N21900 AA067 TRQ...CAB: ACCEL PEDAL TYPE IN PTO N21140 AA068 YES...CAB: ACCEL ACTV IN CAB PTO N21990 AA069 YES...PTO REM PEDAL ENABLE N21600 AA070 ON AD.REM: CLUTCH INTLK N22140 AA071 OFF...REM: CUSTOM INTLK N21700 AA072 ON AD.REM: NEUTRAL INTLK N21710 AA073 ON AD.REM: SER BRK INTLK: NO PTO N21980 AA074 2000..REM:MAX ENG SPD-ACCEL CTRL N21110 AA075 2000..REM: MAX ENG SPD-SW/ TSC1 CT N21320 AA076 650...REM: MIN ENG SPD N21290 AA077 800...REM: DEDICATED PRESET (-) N21490 AA078 900...REM: DEDICATED PRESET (+) N21580 AA079 DEDIC.REM: PRESET +/- SWITCH TYPE N20690 AA086 68....MAX ACCEL PEDAL VEH SPD N21300 AA087 0.....VSL EXPIRATION DISTANCE N21310 AA088 100...LRSL SPD LMT N20740 AE001 NO....ENBL MX RETARDER IN NEUTRAL N20710 AE002 650...IDLE TARGET N20930 AE003 ON....FIC ENABLE/DISABLE N22070 AA056 OFF...CAB: CUSTOM INTLK N22170 AQ001 4.....PCC Max Negative Offset (AQ0 N22180 AQ002 4.....PCC Max Positive Offset (AQ0		
2091120	S	**EMUX Electronics Architecture**	0	**0**
2091310	O	**Engine Idle Shutdown Timer Disabled**	0	**0**
2091372		**Eff EIST NA Expiration Miles**	0	**0**
2091640		**Effective VSL Setting NA**	0	**0**
2092013	O	**Typical Operating Speed 60 MPH**	0	**0**
2092028	O	**MX Retarder State Cruise Control On** (Coast Mode Engine Parameter)	0	**0**
2092033	O	**Powertrain Optimized for Balance** Best analysis for vehicles where service includes frequent start and stop cycles.	0	**0**
2092065	O	**PTO Mode Control - CAB Station**	0	**0**

Sales Code	Std/ Opt	Description	$ List	Weight
2092079	O	**Decline Driver Performance Assistant**	0	0
2092081	O	**Engine Monitoring Protection - Warn** (PACCAR MX) Only a warning is provided in the A-Panel display when DPF regeneration is required. Only available for qualifying intended services such as Fire Engines and Emergency Vehicles. Continued operation without regeneration can result in damage to the engine.	0	0
2140280	O	**Locate Engine Idle Sticker on Bottom of Driver** Door Lower Left Hand Position	0	0
2140410	S	**Engine Brake Controls Located on RH Column**	0	0
2140450	O	**Remote PTO/Throttle, 12-Pin** Eng Bay Remote Control Provision	135	0 *
2140670	O	**EPA Emission Warranty**	0	0
2140700	S	**EPA Engine Idling Compliance**	0	0
2141000	O	**Steel Front Engine Support IPO Standard Aluminum**	699	20
2513060	S	**PACCAR 160 Amp Alternator, Brushed** PACCAR 160 AMP alternator, brushed producing 160 Amps at road speed and 100 Amps at idle.	0	0
2521090	S	**Immersion Type Block Heater 110-120V** Standard location is left-hand under cab, Model 520 is in bumper, and for Model 220 it is at the driver step. Plug includes a weather-proof cover that protects the receptacle. This pre-heater keeps the coolant in the engine block from freezing when the engine is not running.	0	0
2522080	S	**PACCAR Premium Starter - MX Engines Only** PACCAR Premium 12 volt. Better cranking power, lower current draw and improved warranty to 36 months / 350,000 mi / 560,000 km.	0	0
2538040	S	**3 PACCAR Premium 12V Dual Purpose Batt 2190 CCA** Threaded stud type terminal. Stranded copper battery cables are double aught (00) or larger to reduce resistance.	0	0
2539480	O	**Batteries In LH BOC Box**	0	0
2539720	S	**Low Voltage Disconnect System**	0	0
2621090	S	**HORTON ON/OFF Fan Clutch**	0	0
2738410	S	**WABCO 25.9 CFM Air Compressor, MX only** WABCO 25.9 CFM air compressor, MX only, provides greater air output aiding in cleaner operation, higher efficiency, and durability.	0	0
2811160	S	**Compression Brake, MX** The Mx brake features a Jacobs Brake with an integrated compression-release brake and engine overhead. the specially designed exhaust came lobe provides both exhaust cam motion and deicated Compression release timing. This results in precise timing of the valve opening, unleashing higher retarding performance with minimum loading on the engine.	0	0

Sales Code	Std/ Opt	Description	$ List	Weight
2921180	S	**PACCAR Fuel/Water Separator On Engine** Extended life fuel filter, optimized for MX engines and Includes fuel heat, 12V electric heat and WIF sensor.	0	**0**
3114270	S	**High Efficiency Cooling System** Cooling module is a combination of steel and aluminum components, with aluminum connections to maximize performance and cooling capability. Silicone radiator & heater hoses enhance value, durability, & reliability. Constant tension band clamps reduce leaks. Chevron Delo Extended Life Coolant (NOAT) extends maintenance intervals reducing maintenance costs. Anti-freeze effective to -30 degrees F helps protect the engine. Low coolant level sensor warns of low coolant condition to prevent engine damage. Radiator Size by Model: 520 1202 sq in, 579 1456.9 sq in, 535/536/537/548 949.3 sq in, 537/548 VOC 1000.3 sq in, 389 HH 1604 sq in, 567 1379 sq in.	0	**0**
3291680	S	**(1) Air Cleaner Firewall Mounted** Molded rubber air intake connections with lined stainless steel clamps seal to prevent contaminants in air intake.	0	**0**
3367160	S	**Exhaust Single RH Side of Cab** DPF/SCR RH Under Cab, Single Module	0	**0**
3381770	O	**Curved Tip Standpipe(s)**	43	**1**
3381820	O	**Chrome Finish Over Elbows for Single Exhaust** Requires stainless steel muffler guard/fairing (3381830), and Aftertreatment right-hand under cab.	107	**7**
3387870	S	**24" Ht, 5" Dia Chrome, Clear Coat Standpipe(s)**	0	**0**
Transmission & Equipment				
4030070	O	**Paccar TX-18 PRO PXDP-16F118D** Automated 18-Speed, Cooler Not Included	10,408	**173**
4210870	O	**RPL20 Driveline Interaxle** Requires RPL20 Driveline interaxle (option 4210870) for tandem rear axles. RPL20 series drivelines are built for heavy-duty commericial vehicles and are permanetely lubricated and sealed for life with triple lip seals to protect against contaminants. All Meritor drivelines will be primed before painted, improving paint adhesion for longer lasting quality in the field.	0	**0**
4211360	O	**RPL25 SD Driveline, 1 Midship Bearing** All Meritor drivelines will be primed before painted, improving paint adhesion for longer lasting quality in the field.	951	**120**
4233900	O	**(1) Dash Mounted Single Acting EOA PTO Control** Electric-over-air (EOA), spec'ing PTO (power-take-off) control switch does not ensure the PTO will fit.	112	**0** *
4240030	O	**Endurant XD/PACCAR TX-18 Oil Cooler** Oil-To-Water	652	**16**
4252190	O	**Shifter Plate, PTO Access Hole**	94	**0** X
4252610	S	**Column Mounted Shifter RH Side**	0	**0**
4253080	O	**Performance Shift Calibration**	0	**0**

Sales Code	Std/ Opt	Description	$ List	Weight
		Endurant / Paccar transmissions only		
4253140	O	**2nd Shift Calibration: Off Road** PCAR TX-18 Pro / Endurant XD Pro	0	0
4253210	O	**Dash Switch: Rock Free Mode For** PCAR TX-18PRO/TX-12PRO/EndurantPRO	14	0
4253220	O	**Enable Second Shift Calibration** Pcar Tx-18 Pro / Endurant XD Pro	0	0
4257050	S	**Neutral Coast Mode** Automated transmission.	0	0
Air & Trailer Equipment				
4510210	O	**Bendix AD-HF EP Air Dryer, Heater** Coalescing filter, extended purge. Bendix AD-HF air filters protects the life of your engine system and components. Proven PuraGuard oil coalescing technonlgy in the the air dryer catridge. This oil coalescing filter ensures the removal of oil and oil aerosols before they can contaminate the moisture removing desiccant.	167	6
4520420	O	**Pull Cords All Air Tanks**	2	1
4540420	S	**Nylon Chassis Hose**	0	0
4543340	O	**Aluminum Painted Air Tanks** All air tanks are aluminum with painted finish except when Code 4543330 Polish Aluminum Air Tanks is also selected (then exposed air tanks outside the frame rails will be polished aluminum). Peterbilt will determine the optimal size and location of required air tanks. Narratives requesting a specific air tank size or location will not be accepted for factory installation. See ECAT to determine number or location of air tanks installed.	156	-45
4544090	O	**Pre-Trip Inspection Feature Activated By Brake** The pre-trip inspection feature applies service brakes via foot valve and park valve allowing driver to exit vehicle and check brake stroke and lights prior to taking a trip.	217	0
4610920	S	**Self-Returning Brake Hand Valve** Dash mounted controls	0	0
4611930	O	**Body Connections 5' BOC** Junction box contains light and power circuits for body connections located 5' from back-of-cab	193	6
4612900	O	**AE Connection EOF, 7-Way Socket, Connection EOF** Strapped to the rail	-129	15
Tires & Wheels				
5064010	O	**FF: BR 20ply 315/80R22.5 M870** Efficiency Rating: Fair Diameter= 42.8 inches; SLR= 19.9 inches The Bridgestone M870 is a high scrub All-Position Radial tire designed specifically for urban waste collection.	687	94
5169310	O	**RR: BR 16ply 11R22.5 M799**	2,156	80

Sales Code	Std/ Opt	Description	$ List	Weight
		Efficiency Rating: Poor Diameter = 42.0 inches; SLR = 19.5 inches		
5190008	S	**Code-rear Tire Qty 08**	0	0
5220520	O	**FF: Alcoa 89U637 22.5 X 9.00 High Polish** Aluminum, Ultra ONE technology that saves more than 50 lbs. versus a comparable steel wheel. Built for refuse, logging, mining and other heavy haul applications that demand a tough wheel. Each wheel offers a 10,000 lbs. load rating.	494	-36
5320410	O	**RR: Alcoa 885657 22.5X8.25 High Polish** Aluminum wheel severe service.	1,904	-136
5390008	S	**Code-rear Rim Qty 08**	0	0
Fuel Tanks				
5554100	O	**26" Aluminum 70 Gallon Fuel Tank LH U/C** Includes steps for cab access. Paddle handle filler cap with threadless filler neck. Top draw fuel plumbing reduces chance of introducing air into the fuel system during low fuel level conditions due to the central placement of fuel pickup tube. Wire braid fuel lines increase durability & reduce potential for leaks.	578	18
5602070	O	**Location LH U/C 70 Gallon**	0	0
5652890	S	**DEF Tank Mounted LH BOC** Models 220 and 520 mounted left hand back-of-cab.	0	0
5652990	O	**DEF To Fuel Ratio 2:1 Or Greater**	0	0
5655019	S	**DEF Tank Small, HD 14 Gal 2.1M MD 5.5 Gal**	0	0
5760010	O	**RH Tank None Furnished**	-712	-86
Battery Box & Bumper				
6010670	O	**Aluminum Space Saver Battery Box LH BOC** Battery access from side	-217	-57
6030540	O	**Polish Battery/Tool Box(s)** Aftertreatment Cab Entry, complete	329	0
6040550	S	**Aftertreatment Aluminum Non-Slip Cab Entry** Aftertreatment right-hand under cab step. DPF/SCR for diesel engines, catalyst for natural gas engines. On Models 579 specifying chassis fairings, the box is aerodynamic.	0	0
6121090	O	**Steel Bumper Deep Tapered Chromed** Two tow points	-372	49
Cab & Equipment				
6515760	O	**Vocational 115 BBC Alum Cab and Metton Hood SFFA** Stainless steel crown and grille with tilt assist.	1,531	-60
6540660	O	**SmartSound Cab Insulation Package**	421	65

Sales Code	Std/ Opt	Description	$ List	Weight
		Cab acoustic insulation package for day cabs. Includes insulated inside firewall, top side floor damping, absorber treated kick panels, and insulated backwall and roof structure.		
6700000	S	**No Sleeper Selected**	0	0
6800510	O	**Fender Lips 2.25" Wide**	493	6
6911740	O	**Peterbilt LX Driver** Peterbilt LX Air seat, high height backrest, adjustable seat track length, 2 chamber lumbar support, premium suspension with adjustable damping, auto leveling, exit air dump, memory for sitting height, fore-aft isolator with lockout, vinyl bellows over suspension, Requires folding armrests, side and back storage pocket. Adds 40mm of increased space for steering wheel to chest and improved driver ingress/egress into cab and sleeper (knee sweep) with improved passenger side ingress/egress for personal carog/luggage. Standard with fabric/vinyl finish - color coordinated with interior color	180	3
6921130	O	**Peterbilt LX Passenger seat** Peterbilt LX Air seat, high height backrest, adjustable seat track length, 2 chamber lumbar support, premium suspension with adjustable damping, auto leveling, exit air dump, memory for sitting height, fore-aft isolator with lockout and vinyl bellows over suspension. Adds 40mm of increased space for steering wheel to chest and improved driver ingress/egress into cab and sleeper (knee sweep) with improved passenger side ingress/egress for personal cargo/luggage. Standard with fabric / vinyl - color coordinated with interior color.	518	28
6930580	O	**Drivers Armrests - LH & RH**	170	4
6930590	O	**Passenger Armrest - LH only** Required with Evolution LX seats, optional with Evolution ST Seats.	125	2
6930800	O	**Black Seat Color IPO Standard Color**	0	0
6939400	S	**Air Ride Driver**	0	0
6939420	S	**High Back Driver**	0	0
6939480	O	**Mordura Driver**	92	0
6939500	O	**Air Ride Passenger**	0	0
6939520	S	**High Back Passenger**	0	0
6939580	O	**Mordura Passenger**	92	0
7000045	O	**High-Visibility Interior Grabhandles, Painted** Bright yellow interior grabhandle for vocational vehicles.	37	0
7001520	S	**Adjustable Steering Column - Tilt/Telescope**	0	0
7001580	O	**Vanity Mirror on Inside Sunvisors**	22	0

Sales Code	Std/ Opt	Description	$ List	Weight
		For use with ProBilt 1.9, Prestige (1.9 & 2.1) or Premier (2.1) interiors.		
7001630	O	**Premium Steering Wheel with Multi Function** Premium Multi-functional Leather Wrapped Steering Wheel with Peterbilt logo over horn button. Includes audio volume, seek, mute and mode button on LH pod with cruise control on/off/cancel, set/resume and accelerate/coast on the right pod.	153	5
7037130	S	**Prestige Interior - Sterling Gray** Features single tone dash with tough, scratch resistant materials including soft touch points on top of dash. Top of dash, door panel uppers, and kick panel are charcoal to conceal dirt and mitigate wear. Includes unique technical grained A,B, C & D instrument panels with contoured doorpads, padded fabric headliner and vinyl wall panels. Superior ergonomics are achieved while maximizing productivity featuring: multiple power ports, (2) coat hooks, header-mounted domelight, power lift driver and passenger windows, LH and RH door mounted map pockets with built-in courtesy lights, driver and passenger dome/reading lights and footwell lighting. Comfort features include automatic temperature HVAC controls, 18 inch 4-spoke soft-touch steering wheel, soft-touch steering column cover, rubber flooring, (3) inside sunvisors, integrated "dead pedal, cup holder and map bin in dash.	0	0
7110680	O	**Exterior Cab Entry Grabhandle** Textured; NFPA compliant. Available on Day Cab specifications only.	175	6
7210420	O	**Dark Window Tint IPO Standard Tint - Day Cab**	30	0
7210510	O	**3-Piece Glass Rear Cab Window, All Pieces Fixed**	237	12
7210540	S	**Day Cab Rear Window** Day cab rear window flush to back of cab.	0	0
7230060	S	**1-Piece Curved Windshield**	0	0
7230360	S	**Power Door Locks and Power Window Lifts** Standard	0	0
7322010	S	**Combo Fresh Air Heater/Air Conditioner** With radiator mounted condenser, dedicated side window defrosters, Bi-Level Heater/Defroster Controls, 54,500 BTU/HR, and silicone heater hoses.	0	0
7410040	O	**Outside Sunvisor - Stainless Steel** Not available with 2.1M high roof sleeper.	916	8
7510060	O	**Aero Rear View Mirror Housing, Bright Finish**	335	3
7514010	O	**Peterbilt Aero Rear View Mirror, Motorized** Includes top mirror with motorized, adjustable dual axis heated glass. Bottom mirror is an integrated convex surface. Includes black textured arms with breakaway feature.	322	3
7514050	S	**Look Down Mirror Over Passenger Door** with Black Housing	0	0
7610500	S	**Air Horn Mounted Under Cab**	0	0

Sales Code	Std/ Opt	Description	$ List	Weight
7722120	O	**ConcertClass, AM/FM, Weatherband, 3.5 Aux**	434	10
7725740	O	**Midlevel Speaker Package For Cab** (4) Speakers	120	6
7728030	O	**Radio Mute When In Reverse** For automatic or automated transmission	0	0
7728040	O	**Bluetooth Phone and Audio Requires USB Port**	61	0
7728050	O	**USB Port**	40	0
7748145	O	**CB Terminals/Wiring Mounted Under Header** With mounting bracket	97	2
7748150	O	**(1) Antenna for Factory Installed or F/O CB** Mounted LH cowl, low mount only, with antenna cable. Provides clear top of cab.	111	1
7788335	S	**Global Telematics Hardware**	0	0
7850015	O	**Rear Wall Deep Record/Map Pocket**	77	2
7850555	O	**Dual USB Charging Port**	211	2
7851040	O	**Removable Bugscreen Behind Grille**	183	2
7851480	S	**Peterbilt Electric Windshield Wipers** With Intermittent Feature.	0	0
7852020	O	**Cab Air Suspension**	277	15
7852050	O	**Auto Reset Circuit Protection** Daycab and Sleeper	20	0
7900090	O	**Triangle Reflector Kit, Ship Loose** Florescent triangle emergency road flares are designed to meet and exceed all DOT standards.	33	13
7900310	O	**Fire Extinguisher, Mounted Outboard Driver Seat** Hazmat approval UL listed/rated ABC	77	8
7900401	O	**Cruise Control Inactive With Wipers On**	0	0
7900560	O	**Exterior Audible Alarm, Park Brake Not Set** With door open; city horn.	88	0
7901130	O	**Backup Alarm (107 DB)**	134	3
8011830	S	**Engine Oil Temperature** Located in Digital Cluster Display.	0	0
8011860	O	**Automated Transmission Clutch Temperature Gauge** Located in Digital Cluster Display	0	0
8021800	S	**Air Filter Restriction Pressure Gauge** Located in Digital Cluster Display	0	0
8021810	S	**Brake Application Air Pressure (Tractor)**	0	0

Sales Code	Std/ Opt	Description	$ List	Weight
		Located in Digital Cluster Display.		
8021830	O	**Increased Air Filter Full Indication** For air filter restriction gauge	0	0
8021860	O	**Suspension Air Pressure 1 (Load)** Located in Digital Cluster Display	133	0
8022160	O	**Fuel Filter Restriction Gauge** 52mm Round, backlit. Physical gauges must be ordered in pairs and are limited to a total of 6. If this option is selected on a truck with VMUX electrical architecture, the gauge will be included in the digital display.	221	0
8070080	O	**(2) Additional Dash Switches With Wiring** Located on dash panel C. Availability subject to dash space. Includes 4" 14 gauge wire with butt splice at rear of each additional switch.	89	0
8070370	O	**(1) Spare 3-Way Momentary Switch, F/O Wiring** For electric tarp	67	0
8070390	O	**Engine Hourmeter Gauge** Located in Digital Cluster Display	0	0
8070450	O	**Engine PTO Hourmeter Gauge** Located In Digital Cluster Display	0	0
8070810	S	**Engine Manifold Pressure (Turbo Boost)** Located in Digital Cluster Display	0	0
8070820	S	**Engine Percent Torque** Located in Digital Cluster Display	0	0
8070830	O	**Main Instrumentation Panel** Digital Cluster 15" Display includes: Speedometer, Tachometer, Primary Air Pressure, Secondary Air Pressure, Fuel Level, DEF Level, DPF Filter Status, Fuel Economy, Oil Pressure, Coolant Temp, and Voltmeter.	0	0
8110070	S	**Headlights Projector Module Pod** Fender mounted turn signals, projector module low beam, complex reflector high beam, pod mounted	0	0
8120990	S	**(5) Marker Lights, Aero LED** On roof, visor, or fairing	0	0
8130160	O	**Switch & Wiring For F/O Fog Lights** Without Bumper Cutouts, Switch and wiring for furnished by owner fog lights, interlocked with high beam, on with low beams. P166 and P167 on chassis harness toward front of truck.	29	0
8133470	O	**Switch & Wiring for F/O Beacon/Strobe** Switch and wiring for furnished by owner beacon / strobe, 10' coiled wire back-of-cab / back-of-sleeper, at rear sill.	50	2
8133960	S	**Daytime Running Lights** The brake interlock turns the daytime running lights off when the parking brakes are engaged. This is required on all Canadian vehicles.	0	0
8134160	O	**Self-Canceling Turn Signal**	0	2
8140080	O	**LED Stop/Turn/Tail/Backup** Bracket mounted left-hand / right-hand end of frame	67	20
8140850	O	**Moveable EOF Crossmember For Mounting Tail Lights** Square end of frame with or without end of frame crossmember	51	2

Sales Code	Std/ Opt	Description	$ List	Weight
8153050	O	**(1) F/O Load Light, Switch, (2) 10' Wire Coils** (1) furnished by owner load light, switch, (2) 10" wire coils, under cab/sleeper.	103	3
Paint				
8500710	S	**Standard Paint Color Selection**	-200	0
8530770	S	**(1) Color Axalta Two Stage - Cab/Hood** Base Coat/Clear Coat N85020 A - L0006EY WHITE N85500 CAB ROOF L0006EY WHITE N85300 FENDER L0006EY WHITE N85200 FRAME L0001EA BLACK N85400 HOOD TOP L0006EY WHITE	0	0
Shipping Destination				
Options Not Subject To Discount				
9400090	S	**Peterbilt Class 8 Standard Coverage** 1 year/100,000 Miles (160,000 km)	0	0
9400092	S	**PACCAR MX Standard Coverage** 2 yrs/250,000 mi (400,000 km)/6,250 hrs	0	0
9407147	O	**Fuel Price Index Factor $0 NET**	0	0
9408656	O	**SmartLINQ RD/OTA 5YR Sub** PACCAR MX Engines	799	0
9408703	O	**Base Warr: Emissions 5YR/100K MI-EPA Engine**	0	0
9408982	O	**Vehicle Layout** Option is not subject to discount. Fleets will be split prior to build so that the charge is applied to only one unit. Quotes will not reflect this.	1,500	0
Miscellaneous				
9409001	S	**Day Cab / Prestige Interior (DM)**	0	0
9409063	O	**State Of Registry: Illinois**	0	0
9409645	O	**Model Year 2025 Engine**	0	0
9409655	O	**Peterbilt Motors Company**	0	0
9409749	O	**2024 Series Emissions Engine**	0	0
9409843	O	**Peterbilt Sourcewell Program Code** Applicable with Marketing Programs Only. No CAR allowed	0	0
9485002	O	**Basic Vehicle U.S.(3/100)**	1,513	0

Sales Code	Std/ Opt	Description	$ List	Weight
		3 Years / 100,000 mi / 160,000 km		

Promotions

Special Requirements

Special Requirement 1 0098170
Special Requirement 2
Special Requirement 3
Special Requirement 4

Order Comments

Total List Price (W/O Freight & Warranty & Surcharges)	$251,544	
Marketing and Service Support Fee		$1,595
Prepaid Freight		$3,625
Total Surcharge/Options Not Subject To Discount		$3,812
Total Weight (lbs)		16,454

Prices and Specifications Subject to Change Without Notice.

Unpublished options mayrequire review/approval.
Dimensional and performance data for unpublished options mayvary from that displayed in CRM.

PRICING DISCLAIMER

While we make every effort to maintain the web site to preserve pricing accuracy, prices are subject to change without notice. Although the information in this price list is presented in good faith and believed to be correct at the time of printing, we make no representations or warranties as to the completeness or accuracy of this information. We reserve the right to change, delete or otherwise modify the pricing information which is represented herein without any prior notice. We carefully check pricing specifications, but occasionally errors can occur, therefore we reserve the right to change such prices without notice. We disclaim all liability for any errors or omissions in the materials. In no event will we be responsible for any damages of any nature whatsoever from the reliance upon information from these materials. Please check your order prebills to confirm your pricing information

Shipping Destinations

Intermediate Destination: NONE

Final Destinations	Quantity

AGENDA ITEM SUMMARY

BUFFALO GROVE VILLAGE BOARD

Regular Meeting: March 17, 2025

AGENDA ITEM 9.h. O-2025-51
Ordinance Authorizing the Purchase of one Department of Public Works Fleet Vehicle from Bonnell Industries, Inc.

Contacts

Liaison: Trustee Stein
Staff: James Warnstedt

Staff Recommendation

Staff recommends approval.

Recommended Motion

I move to approve an ordinance authorizing the purchase of one 2025 Ford F-600 Dump Truck from Bonnell Industries, Inc., in an amount not to exceed $197,376.05, subject to final review and approval by the Village Attorney.

Summary

Recommendation

Staff recommends the Village Board authorize the Village Manager to purchase one 2025 Ford F-600 dump truck from Bonnell Industries Inc., through the Sourcewell purchasing cooperative contract # 155873 in accordance with the Illinois Joint Purchasing Act (30 ILCS 525/0.01 et seq.), for a total not to exceed amount of $197,376.05, subject to final review and approval by the Village Attorney.

Background

Staff requests authorization to purchase one Ford F-600 dump truck to replace unit 417, a 2011 Ford F-450, with 53,666 miles currently on the odometer. The replacement unit's budgeted cost of $234,000 is being split evenly between fiscal years 2025 ($117,000.00) and 2026 ($117,000.00). At the completed cost of $197,376.05, this represents $36,623.95 in savings below the budgeted amount. The unit is fully funded in the capital reserve and the old unit will be sold for asset recovery. Completion and delivery of this vehicle is expected in 2026.

This truck is used daily in the Forestry & Grounds Section and will be used for turf restoration, tree planting, tree removal, tree trimming, landscape maintenance, and snow and ice

smart. with heart.
50 Raupp Blvd, Buffalo Grove, IL 60089 847-459-2500 vbg.org

operations. The setup of this versatile vehicle will allow for many uses throughout Public Works, utilizing the dump body, a chip body, a water tank, and a snow and ice body for salt and liquid applications.

Strategic Alignment

Guiding Principle

Principle 1: Financially Responsible and Sound

Goal

Goal 1: Maintained effective village government: fiscally responsible and providing outstanding, responsive services

File Attachments

1. Department of Public Works - Forestry Fleet Replacement Ordinance 2025
2. Ford F-600 Forestry Unit

smart. with heart.
50 Raupp Blvd, Buffalo Grove, IL 60089 847-459-2500 vbg.org

ORDINANCE 2025-xxx

AN ORDINANCE AUTHORIZING THE PURCHASE OF ONE (1) DEPARTMENT OF PUBLIC WORKS FLEET VEHICLE FROM BONNELL INDUSTRIES, INC.

WHEREAS, the Village of Buffalo Grove is a home rule unit pursuant to the Illinois Constitution of 1970; and

WHEREAS, the Village is a member of the Sourcewell Purchasing Cooperative and

WHEREAS, the Village may make purchases in accordance with Illinois Governmental Joint Purchasing Act (30 ILCS 525/0.01 et seq.)

WHEREAS, the Sourcewell Purchasing Cooperative engaged in a competitive procurement process to obtain the best value for money.

NOW THEREFORE BE IT ORDAINED by the President and Board of Trustees of the Village of Buffalo Grove, Cook and Lake Counties, Illinois, as follows:

SECTION 1. The foregoing recitals are hereby adopted and incorporated and made a part of this Ordinance as if fully set forth herein.

SECTION 2. The Village Board has authorized the Village Manager to purchase one (1) 2025 Ford F-600 Dump Truck from Bonnell Industries, Inc., in an amount not to exceed $197,376.05, subject to final review and approval by the Village Attorney.

SECTION 3. If any section, paragraph, clause or provision of this Ordinance shall be held invalid, the invalidity thereof shall not affect any other provision of this Ordinance.

SECTION 4. This Ordinance shall be in full force and effect from and after its passage and approval and shall not be codified.

AYES: _____
NAYES: _____
ABSENT: _____
PASSED: _____, 2025
APPROVED: _____, 2025
PUBLISHED: _____, 2025

ATTEST:

_____
Janet M. Sirabian, Village Clerk

APPROVED:

_____
Eric N. Smith, Village President

DRAFT

smart. with heart.
50 Raupp Blvd, Buffalo Grove, IL 60089 847-459-2500 vbg.org

BONNELL INDUSTRIES INC
TRUCK & ROAD EQUIPMENT
Sourcewell Contract Number: 062222-BNL

1385 Franklin Grove Rd
Dixon, IL 61021
815-284-3819 * 815-284-8815 Fax
800-851-9664
www.bonnell.com * info@bonnell.com

Quote

Quote Number: 0184187
Quote Date: 2/28/2025
Sourcewell ID: 68648

FINANCING AVAILABLE
ASK US FOR DETAILS

Bill To: 4592545
VILLAGE OF BUFFALO GROVE
51RAUPP BLVD
BUFFALO GROVE, IL 60089-2138

Ship To: 01
VILLAGE OF BUFFALO GROVE
51RAUPP BLVD
CENTRAL GARAGE
BUFFALO GROVE, IL 60089

Phone: (847) 459-2545 Fax: (847) 537-1742 apfinance@vbg.org

Phone:
Fax:

Confirm To: JOSH WALLACE

Comment:

Customer P.O.	Ship VIA	F.O.B.	Terms	Quote Expiration
	CALL CUSTOMER	DIXON	NET DUE UPON RECEIPT	3/28/2025

Ordered	Unit	Item Number
1.00	EACH	**TRUCK PACKAGE**

SOURCEWELL # 155873 COMPLETE SNOW FIGHTER PACKAGE "ULTIMATE LEVEL" ONE TON CLASS

$101,076.00

APPLICATION: ONE NEW FORD F600 CLASS 5/6 A 60" CAB TO AXLE MEASUREMENT.

INCLUDES INSTALLATION OF THE FOLLOWING EQUIPMENT:

- DUMP BODY
- CAB SHIELD INSTALLED ON BODY
- HYDRAULIC SYSTEM
- ELECTRICAL & LIGHTING
- CONSOLE AND CONTROLS
- REAR TOWING HITCH
- WESTERN 10' PRO PLUS HD SNOW PLOW

THE FOLLOWING ADDTIONAL ITEMS ARE INCLUDED:

- POLY FULL COVER FENDERS MANUFACTURED BY MINIMIZER
- FENDER BRACKET MAT'L: STAINLESS
- FRAME COATING, (BLACK PPG AMERSHIELD PAINT)
- SPECIALLY LOCATED SHOVEL HOLDER(S)

INSTALLED EQUIPMENT DETAILS ARE LISTED BELOW:

1.00 EACH **CHASSIS**

2025 FORD XLT F-600 CAB AND CHASSIS 60" CA--PAINTED WHITE

CHASIIS PRICE $77,827.70 IS INCLUDEED IN THIS QUOTE

1.00 EACH **DUMP BODY**

- DURACLASS 9'-0" 201-2B STAINLESS DUMP BODY
- CROSSMEMBERLESS
- DOUBLE ACTING UNDER BODY HOIST
- 8" I-BEAM LONGSILLS OF CARBON STEEL
- 3/16" AR450 ABRASION RESISTANT FLOOR
- 12" 10 GA 201-2B STAINLESS SIDES-(SMOOTH SIDES)
- 18" 10 GA 201-2B STAINLESS FRONT
- 18" 10 GA 201-2B STAINLESS VERTICAL TAILGATE-(SINGLE PANEL)
- 201-2B STAINLESS CORNER POST
- MANUAL OPERATED TAILGATE LATCH

Continued

BONNELL INDUSTRIES INC
TRUCK & ROAD EQUIPMENT
Sourcewell Contract Number: 062222-BNL

1385 Franklin Grove Rd
Dixon, IL 61021
815-284-3819 * 815-284-8815 Fax
800-851-9664
www.bonnell.com * info@bonnell.com

Quote

Quote Number: 0184187
Quote Date: 2/28/2025
Sourcewell ID: 68648

FINANCING AVAILABLE
ASK US FOR DETAILS

Bill To: 4592545
VILLAGE OF BUFFALO GROVE
51RAUPP BLVD
BUFFALO GROVE, IL 60089-2138

Ship To: 01
VILLAGE OF BUFFALO GROVE
51RAUPP BLVD
CENTRAL GARAGE
BUFFALO GROVE, IL 60089

Phone: (847) 459-2545 Fax: (847) 537-1742 apfinance@vbg.org

Phone:
Fax:

Confirm To: JOSH WALLACE

Comment:

Customer P.O.	Ship VIA	F.O.B.	Terms	Quote Expiration
	CALL CUSTOMER	DIXON	NET DUE UPON RECEIPT	3/28/2025

Ordered	Unit	Item Number
		- GREASABLE TAILGATE LINKAGE INCLUDING UPPER HINGE - STAINLESS STEEL TAILGATE LATCH LINKAGE - LABOR TO INSTALL CUSTOM CAB SHIELD - RIGID REAR RUBBER MUD FLAPS INSTALLED - (2) OBLONG LIGHT HOLE CUTOUTS IN EACH CORNER POST - CONDUIT FOR WIRING CAB SHIELD LIGHTS AND CAMERAS - PREPPED FOR NEW TAILGATE SPREADER - INTEGRAL T-GATE SHIELDS & HARDWARE FOR T-GATE PROPS - 201 SS TAPER SIDE BOARDS INSTALLED - BODY TOP BE PAINTED SINGLE STAGE ONE COLOR - BODY PAINTED TO MATCH CAB
1.00	EACH	**CAB SHIELD**
		. CONFIGURED AS FOLLOWS: *MATERIAL IS TO BE 201 STAINLESS STEEL. *PAN WIDTH- 15". *WIDTH- DETERMINED. *HEIGHT TO BE DETERMINED TO BOTTOM OF PAN. *4 REAR FACING OBLONG LIGHT HOLES. *1 SIDE FACING OBLONG LIGHT HOLE IN EACH SIDE FACING OUT. *STAINLESS STEEL TO BE ELECTROCHEMICALLY CLEANED AND PASSIVATED. **LIGHTING CODE: 41112
1.00	EACH	**HYDRAULIC SYSTEM**
		- PTO: CHELSEA 210 SERIES - ADD-A-FOLD HYDRAULIC VALVE TO OPERATE: HOIST, PLOW, PREWET, AUGER, SPINNER - "FORCE" ULTRA CONTROL ARM - "FORCE" 6100 GEN5 SPREADER CONTROLLER - "FORCE" VT15 STAINLESS STEEL TANK AND LID - EATON HP171 SERIES WITH SENSOR HIGH PRESSURE FILTER - BRASS QUICK COUPLERS - CLOSED LOOP PREWET CABLE - CLOSED LOOP GRANULAR SENSOR - BONNELL CONSOLE FOR ULTRA CONTROLLER ARM
1.00	EACH	**ELECTRICAL**
		- ALL LED LIGHTING UNLESS OTHERWISE NOTED - BONNELL 6100 MINI-FUSE PROTECTION PANEL - BODY UP SWITCH WITH INDICATOR LAMP - BONNELL WIRE HARNESSES

Continued

BONNELL INDUSTRIES INC
TRUCK & ROAD EQUIPMENT
Sourcewell Contract Number: 062222-BNL

1385 Franklin Grove Rd
Dixon, IL 61021
815-284-3819 * 815-284-8815 Fax
800-851-9664
www.bonnell.com * info@bonnell.com

Quote

Quote Number: 0184187
Quote Date: 2/28/2025
Sourcewell ID: 68648

FINANCING AVAILABLE
ASK US FOR DETAILS

Bill To: 4592545
VILLAGE OF BUFFALO GROVE
51RAUPP BLVD
BUFFALO GROVE, IL 60089-2138

Ship To: 01
VILLAGE OF BUFFALO GROVE
51RAUPP BLVD
CENTRAL GARAGE
BUFFALO GROVE, IL 60089

Phone: (847) 459-2545 Fax: (847) 537-1742 apfinance@vbg.org

Phone:
Fax:

Confirm To: JOSH WALLACE

Comment:

Customer P.O.	Ship VIA	F.O.B.	Terms	Quote Expiration
	CALL CUSTOMER	DIXON	NET DUE UPON RECEIPT	3/28/2025

Ordered	Unit	Item Number

CAB ROOF LIGHTING AND ACCESSORIES

- WHELEN 54" LEGACY "DUO" LED LIGHT BAR AS FOLLOWS:
  * FOUR CORNER FLASHERS
  * 2 FRONT FACING SCENE LIGHTS

PLOW LIGHTING

BODY LIGHTING

- ONE PAIR REAR FACING OBLONG STT ON CABSHIELD
- ONE PAIR REAR FACING OBLONG AMBER/WHITE FLASHERS ON CABSHIELD
- ONE PAIR 500 SERIES STT IN REAR POSTS
- ONE PAIR 500 SERIES AM/WHITE FLASHERS IN REAR POSTS
- MARKER LIGHTS PER FMVSS STANDARDS

REAR HITCH AND CHASSIS LIGHTING

- ONE PAIR WHELEN 60BTT STT LIGHTS ON REAR HITCH
- ONE CENTER WHE-60C00WCR BACKUP LIGHT ON REAR HITCH
- PM-290C LICENSE PLATE LIGHT ON REAR HITCH
- ICC THREE LIGHT CLUSTER ON REAR HINGE OF BODY
- VEL-697112 BACK UP ALARM ON REAR HITCH OR FRAME

EQUIPMENT WORK LIGHTS AND FLASHERS

- ABL WORK LIGHT MOUNTED OUTSIDE CORNER POST ON DRIVERS SIDE AIMED AT SPINNER
- ABL WORK LIGHT MOUNTED OUTSIDE CORNER POST ON CURB SIDE AIMED REARWARD
- LIGHTS ON SEPARATE SWITCHES

TWO CAMERA SYSTEM

- 1ST CAMERA MOUNTED ON L/H CORNER POST-AIM @ SPREADER
- 2ND CAMERA MOUNTED ON CAB SHIELD-AIMED INTO BOX
- 3RD CAMERA MOUNTED ON R/H CORNER POST AIMED TO THE REAR
- CAMERA SYSTEM TO USE FORCE AMERICA DISPLAY

1.00 EACH **REAR HITCH**

CONFIGURED AS FOLLOWS: YES
- REAR HITCH TYPE: 1-TON: REC TUBE & WHE600 LITES
- 1/2" CARBON STEEL PLATE

Continued

BONNELL INDUSTRIES INC
TRUCK & ROAD EQUIPMENT
Sourcewell Contract Number: 062222-BNL

1385 Franklin Grove Rd
Dixon, IL 61021
815-284-3819 * 815-284-8815 Fax
800-851-9664
www.bonnell.com * info@bonnell.com

Quote

Quote Number: 0184187
Quote Date: 2/28/2025
Sourcewell ID: 68648

FINANCING AVAILABLE
ASK US FOR DETAILS

Bill To: 4592545
VILLAGE OF BUFFALO GROVE
51RAUPP BLVD
BUFFALO GROVE, IL 60089-2138

Ship To: 01
VILLAGE OF BUFFALO GROVE
51RAUPP BLVD
CENTRAL GARAGE
BUFFALO GROVE, IL 60089

Phone: (847) 459-2545 Fax: (847) 537-1742 apfinance@vbg.org

Phone:
Fax:

Confirm To: JOSH WALLACE

Comment:

Customer P.O.	Ship VIA	F.O.B.	Terms	Quote Expiration
	CALL CUSTOMER	DIXON	NET DUE UPON RECEIPT	3/28/2025

Ordered	Unit	Item Number
		- STD PINTLE MTG HEIGHT - 2.5" RECEIVER TUBE WITH K300 ON 2.5" MULTI-HOLE INSERT - TRAILER PLUG: 7 FLAT PIN RV STYLE
1.00	EACH	**PREWET SYSTEM**
		BONNELL CONFIGURED PREWET SYSTEM CONFIGURED AS FOLLOWS: YES - PREWET SYSTEM CONFIGURED AS FOLLOWS:
1.00	EACH	**FM-35P-1-150**
		Frame Mounted Prewet System with one 35 Gallon Poly Tank, STAINLESS Steel Tank Brackets, and 1-1/2in Plumbing.
1.00	EACH	**L10120**
		Hydraulic Prewet Pump in a Stainless Enclosure to Operate a Closed Loop System. Includes an IP68 Wire Connection for Feedback Signal.
1.00	EACH	**L10327**
		Automatic 3-Way Valve in lieu of in line check valve. (Used on 6100 controllers only) Installed.
1.00	EACH	**UT SPREADER**
		- UNDER TAILGATE SPREADER PAINTED MATCH THE CHASSIS CAB--WHITE, CONFIGURED AS FOLLOWS:
1.00	EACH	**BT-696-DD-AS**
		SPREADER, BT-696-DD-AS, DIRECT DRIVE, 6" AUGER, STD MOTOR -UNDERTAILGATE SPREADER -6" AUGER X 96" WIDE -STAINLESS STEEL CONSTRUCTION -STANDARD 24" OFFSET DROP -DIRECT DRIVE -INCLUDES 18" POLY SPINNER ASSEMBLY -INCLUDES 24" TAILGATE SHIELDS -QUICK MOUNT KIT -SAFETY INTERLOCK
1.00	EACH	**U10200**
		Single Spinner Assembly Mounted At Standard Drop Port. (Standard On All Spreaders). 18" Poly Spinner with 2.8 Cubic Inch Spinner Motor
1.00	EACH	**U10311**
		Short Hose Kit for Bonnell Installations. Comes With Two Spinner Hoses, Two Drive Hoses, And Quick Disconnects.
1.00	EACH	**U10312**
		Brass Quick Couplers ILO Steel

Continued

BONNELL INDUSTRIES INC
TRUCK & ROAD EQUIPMENT
Sourcewell Contract Number: 062222-BNL

1385 Franklin Grove Rd
Dixon, IL 61021
815-284-3819 * 815-284-8815 Fax
800-851-9664
www.bonnell.com * info@bonnell.com

Quote

Quote Number: 0184187
Quote Date: 2/28/2025
Sourcewell ID: 68648

FINANCING AVAILABLE
ASK US FOR DETAILS

Bill To: 4592545
VILLAGE OF BUFFALO GROVE
51RAUPP BLVD
BUFFALO GROVE, IL 60089-2138

Ship To: 01
VILLAGE OF BUFFALO GROVE
51RAUPP BLVD
CENTRAL GARAGE
BUFFALO GROVE, IL 60089

Phone: (847) 459-2545 Fax:(847) 537-1742 apfinance@vbg.org

Phone:
Fax:

Confirm To: JOSH WALLACE

Comment:

Customer P.O.	Ship VIA	F.O.B.	Terms	Quote Expiration
	CALL CUSTOMER	DIXON	NET DUE UPON RECEIPT	3/28/2025

Ordered	Unit	Item Number
1.00	EACH	**U10330** Light Bar With Stop, Turn, Tail, Backup, And 3 Light Cluster.
1.00	EACH	**U10369** Custom Tailgate Prop/Shield Combo Installed. (Must have dump body to build and install these)
1.00	EACH	**U10390** 72" Spray Bar Installed In Spreader Body
1.00	EACH	**U10400** Paint Stainless Steel Spreader Custom Color.
1.00	EACH	**WESTERN PLOW**
1.00	EACH	**WES-29047** ADAPTER
1.00	EACH	**WES-29070-1** 3 PORT DRL LIGHTING MODULE
1.00	EACH	**WES-31271** ULTRAMOUNT MOUNT, 2020 FORD F-350 DRW, DIESEL PICKUPS AND F-450 PICKUPS
1.00	EACH	**WES-72525** NIGHTHAWK LED HEADLIGHT KIT
1.00	EACH	**WES-74961** 9' PRO PLUS HD CARBIDE
1.00	EACH	**WES-76910-4** BIG BOX ASSY PRO PLUS HD CENTRAL HYDRAULICS H9/H11
1.00	EACH	**WES-76920** BLADE ASSY 10' PRO PLUS HD
1.00	EACH	**WES-80295** PRO PLUS HD CE / CURB KIT

Continued

BONNELL INDUSTRIES INC
TRUCK & ROAD EQUIPMENT
Sourcewell Contract Number: 062222-BNL

1385 Franklin Grove Rd
Dixon, IL 61021
815-284-3819 * 815-284-8815 Fax
800-851-9664
www.bonnell.com * info@bonnell.com

Quote

Quote Number: 0184187
Quote Date: 2/28/2025
Sourcewell ID: 68648

FINANCING AVAILABLE
ASK US FOR DETAILS

Bill To: 4592545
VILLAGE OF BUFFALO GROVE
51RAUPP BLVD
BUFFALO GROVE, IL 60089-2138

Ship To: 01
VILLAGE OF BUFFALO GROVE
51RAUPP BLVD
CENTRAL GARAGE
BUFFALO GROVE, IL 60089

Phone: (847) 459-2545 Fax: (847) 537-1742 apfinance@vbg.org

Phone:
Fax:

Confirm To: JOSH WALLACE

Comment:

Customer P.O.	Ship VIA	F.O.B.	Terms	Quote Expiration
	CALL CUSTOMER	DIXON	NET DUE UPON RECEIPT	3/28/2025

Ordered	Unit	Item Number
1.00	EACH	**WES-82007** CUP HOLDER MOUNT
1.00	EACH	**WES-85973-2** PLUG IN HARNESS
1.00	EACH	**WES-FLAP KIT** RUBBER FLAP KIT, WESTERN PLOWS, UP TO 10'
1.00	EACH	**CONTAINMENT BODY** CONFIGURED AS FOLLOWS: YES CONTAINMENT BODY PAINTED SINGLE STAGE ONE COLOR
1.00	EACH	**TCC9SS** TITAN CHIPPER CAP: STANDARD FEATURES INCLUDE: SLOPED SIDES AND FRONT PROVIDE STYLED LOOK THAT DOES NOT ALLOW MATERIAL TO BUILD UP IN FLAT AREAS. CUSTOM FIT TO YOUR DUMP BODY. (DATA SHEET MUST BE FILLED OUT FOR CUSTOM FIT) THE CAP WILL BOLT IN PLACE USING BOARD POCKETS. CONSTRUCTED OUT OF 10-GAUGE STAINLESS STEEL (SIDES AND FRONT). WITH ANGLED PLASMA CUT VENTS. TOP LIFTING EYES FOR EASY INSTALLATION WITH AN OVERHEAD CRANE. TUBULAR FRAME AROUND THE REAR OPENING.
1.00	EACH	**CB50103** Front Debris Deflector Installed
1.00	EACH	**CB50112** Chipper Cap Installation onto Body
1.00	EACH	**CB50122** Paint Containment Box Single Stage One Color --WHITE-- outside only
1.00	EACH	**/SOURCEWELL SOURCE GOODS ADJ** ALL ITEMS LISTED BELOW ARE OPEN PURCHASED REQUESTS (SOURCED GOODS) BY THE CUSTOMER TO ADD TOO,DELETE OR REPLACE ITEMS ON #155873 ONE TON CLASS "ULTIMATE LEVEL" SNOW FIGHTER PACKAGE $96,300.05

Continued

BONNELL INDUSTRIES INC
TRUCK & ROAD EQUIPMENT
Sourcewell Contract Number: 062222-BNL

1385 Franklin Grove Rd
Dixon, IL 61021
815-284-3819 * 815-284-8815 Fax
800-851-9664
www.bonnell.com * info@bonnell.com

Quote

Quote Number: 0184187
Quote Date: 2/28/2025
Sourcewell ID: 68648

FINANCING AVAILABLE
ASK US FOR DETAILS

Bill To: 4592545
VILLAGE OF BUFFALO GROVE
51RAUPP BLVD
BUFFALO GROVE, IL 60089-2138

Ship To: 01
VILLAGE OF BUFFALO GROVE
51RAUPP BLVD
CENTRAL GARAGE
BUFFALO GROVE, IL 60089

Phone: (847) 459-2545 Fax: (847) 537-1742 apfinance@vbg.org

Phone:
Fax:

Confirm To: JOSH WALLACE

Comment:

Customer P.O.	Ship VIA	F.O.B.	Terms	Quote Expiration
	CALL CUSTOMER	DIXON	NET DUE UPON RECEIPT	3/28/2025

Ordered	Unit	Item Number

- 2025 FORD F-600 XLT CAB AND CHASSIS WITH 60"CA --PAINTED WHITE
- WHELEN 54" LEGACY "DUO" LED AMBER / WHITE LIGHT BAR ILO FOUR FRONT FACING CAB SHIELD FLASHER LIGHTS
- WHELEN 500 SERIES LIGHTING PACKAGE ILO STANDARD LIGHTING PACKAGE
- 10' WESTERN PRO PLUS HD SNOW PLOW ILO A HFF-U SNOW PLOW HITCH AND A 10ST31M4 10" UTILITY SNOW PLOW
- CARBIDE SNOW PLOW CUTTING EDGE ILO STANDARD CARBON STEEL SNOW PLOW CUTTING EDGE
- BT-696-DD-AS STAINLESS TAILGATE SPREADER PAINTED WHITE ILO NON PAINTED
- 9' STAINLESS STEEL CHIPPER CAP--OUTSIDE PAINTED WHITE

/LICENSE FEE
LICENSE PLATE FEES

/PROCESSING
PROCESSING FEE

/TITLE
TITLE PROCESSING

SIGNING THIS QUOTE CONSTITUTES YOUR ACCEPTANCE AND AGREEMENT TO THE FOLLOWING:

- **DUE TO THE CLIMATE OF CURRENT MARKET CONDITIONS FINAL INVOICE PRICE MAY VARY FROM ORIGINAL QUOTE PRICE.**
- **NO PRODUCT/SPEC. CHANGES MAY BE MADE AFTER THE DATE OF SIGNATURE. ANY CHANGES REQUESTED AFTER THE DATE OF SIGNATURE WILL BE QUOTED SEPARATELY AND, IF APPLICABLE, WILL BE COMPLETED ON A SEPARATELY SCHEDULED TIME FRAME.**
- **15% RESTOCKING FEE ON RETURNED ITEMS. NO RETURNS ON ELECTRICAL ITEMS**
- **THIS QUOTE IS VALID FOR 30 DAYS. ALL QUOTES OVER 30 DAYS OLD ARE SUBJECT TO CHANGE AND REQUIRE A REQUOTE PRIOR TO ACCEPTANCE OF A PURCHASE ORDER.**

Net Order:	197,376.05
Less Discount:	0.00
Freight:	0.00
Sales Tax:	0.00
Quote Total:	197,376.05

AUTHORIZED APPROVAL CONTACT NAME (PRINTED): _____

AUTHORIZED APPROVAL CONTACT (SIGNATURE): _____

APPROVAL DATE: _____ **CUSTOMER PO NUMBER:** _____

0008 Matt Hazelwood TG

AGENDA ITEM SUMMARY

BUFFALO GROVE VILLAGE BOARD

Regular Meeting: March 17, 2025

AGENDA ITEM 9.i. O-2025-52
Ordinance Authorizing a Water Purchase and Sale Contract By and Between Village of Buffalo Grove and Village of Long Grove

Contacts

Liaison: Trustee Stein
Staff: Mike Skibbe

Staff Recommendation

Staff recommends approval.

Recommended Motion

I move to approve an Ordinance authorizing the Village Manager to enter into a Water Purchase and Sale Contract with the Village of Long Grove, pending final review and approval of the Village Attorney.

Summary

Background

The Village of Buffalo Grove continues to investigate opportunities to resell potable water to neighboring communities and/or subdivisions. These partnerships benefit our neighbors by providing access to Lake Michigan water that they are otherwise unable to obtain on their own, while allowing the Village to produce additional revenue to supplement the Village's long-term infrastructure modernization. The first such agreement was established with Lake County in 2022, allowing the Village's existing pumping and reservoir capacity to provide water to unincorporated Pekara/Horatio Gardens subdivisions. This connection is scheduled to come online in 2025 following the construction of the connection to our water system.

Long Grove is the second such opportunity and staff has been engaged in negotiations with Long Grove for several years. Long Grove currently serves its residents and businesses through water wells and an existing distribution system. They would maintain the current distribution system while swapping the supply feed to their reservoir to the new Lake Michigan supply. In doing so, water quality will improve significantly.

The attached agreement represents the conclusion of negotiation efforts to provide up to 260,000 gallons per day to Long Grove.

Analysis

smart. with heart.
50 Raupp Blvd, Buffalo Grove, IL 60089 847-459-2500 vbg.org

Buffalo Grove Public Works has determined that the proposed connections to our system and supply of up to 260,000 gallons per day is sustainable within our current excess pumping and reservoir capacity. The proposed connection will cross Arlington Heights Road north of Thompson Blvd. The interconnect between the two systems will occur through a valve and meter vault, owned and maintained by the Village of Buffalo Grove. Ultimately the water is fed to a Long Grove reservoir through a protective air gap between systems. This system is similar to others in town, which create a clear and safe delineation between the two water systems. The Village of Long Grove would then own and maintain the connection pipe from a point one foot outside the vault. From there, the Village of Long Grove will continue to maintain the distribution facilities within their town and handle all resident billing.

It is important to note that the currently contemplated Connection Area is a portion of Long Grove as shown in Attachment A. Any future expansion of the Connection Area may only occur with written consent of Buffalo Grove. Engineering has modeled this usage against both the current water demands of the Village, as well as all future potential expansion of our water supply network. This demand does not substantially change our Capital Improvement programming in both the long and short-term. Any agreed upon expansion to the Long Grove supply could potentially trigger additional Capital Improvements, however it is anticipated that those costs would be part of the discussion with Long Grove at that time.

To obtain Lake Michigan water through resale, Long Grove must acquire their own Lake Michigan Water Allocation. Continued allocation is obligated under the draft agreement. In addition, any water curtailment by Northwest Water Commission or the City of Evanston during urgent or emergent conditions is included.

Finally, the term is coterminous with the term of the First Amended Water Supply Contract with the Northwest Water Commission, as amended or extended, but no longer than 20 years in total from the commencement date.

Financial Impact

Upon execution of the agreement, Long Grove will provide security in the amount of $50,000. This would be reduced to $25,000 after the first anniversary. The remaining amount will be released at the second anniversary. As is consistent with the terms of the Pekara agreement, the water rate to be charged to Long Grove is equal to Buffalo Grove's rate to its residents. This rate is currently $6.87/1000 gallons. Also included is a Fixed Facility Fee based on meter size. This fee is currently $219.12/month for 5" and greater meters. Estimated initial revenue is $80,000/year with a potential for future service area expansion in partnership between the municipalities.

Long Grove is responsible for connection costs, and also agrees to reimburse Buffalo Grove for all legal, engineering, and other professional fees incurred during design, review, and approval of the connection. It is expected that Long Grove will lead the process through their engineering consultant, Gewalt Hamilton, who is well informed of the Village's expectations for the water system based upon their other work directly with Buffalo Grove. However, both Engineering and Water Operations will have several opportunities review and comment on the

project throughout design and construction.

Long Grove is utilizing a variety of sources to complete the project, however one of the main funding sources is Community Project Funding through local representatives. This funding was secured in late 2023 and has since been working through stages of appropriation with the State. Construction is currently expected to start in mid to late 2025 with the system coming online in 2026.

Next Steps

The Village of Long Grove plans to bring the agreement forward for approval at their March 25, 2025 Village Board Meeting. Following a fully executed agreement, staff will work with Long Grove to plan construction timeline, permitting, and initialization of the water supply connection.

Strategic Alignment

Guiding Principle

Principle 1: Financially Responsible and Sound
Principle 3: Plan and Invest in the Future
Principle 5: Partnership with Local Districts

Goal

Goal 1: Maintained effective village government: fiscally responsible and providing outstanding, responsive services

File Attachments

1. DRAFT Ordinance - Long Grove Water Agreement
2. Long Grove_Buffalo Grove Water Supply Agreement, 8
3. Exhibit A - Connection Area
4. Exhibit B - Ownership Exhibit (REVISED 02.27.25)

smart. with heart.
50 Raupp Blvd, Buffalo Grove, IL 60089 847-459-2500 vbg.org

ORDINANCE 2025-xxx

AN ORDINANCE AUTHORIZING A WATER PURCHASE AND SALE CONTRACT BY AND BETWEEN VILLAGE OF BUFFALO GROVE AND VILLAGE OF LONG GROVE

WHEREAS the Village of Buffalo Grove is a home rule unit pursuant to the Illinois Constitution of the State of Illinois of 1970; and

WHEREAS the Village of Long Grove is a non-home rule Illinois municipality pursuant to the Constitution of the State of Illinois of 1970, as amended; and

WHEREAS the Village seeks to enter into an agreement with the Village of Long Grove for the purposes of purchase and sale of potable water.

NOW THEREFORE BE IT ORDAINED by the President and Board of Trustees of the Village of Buffalo Grove, Cook and Lake Counties, Illinois, as follows:

SECTION 1. The foregoing recitals are hereby adopted and incorporated and made a part of this Ordinance as if fully set forth herein.

SECTION 2. The Village Manager is authorized to enter into an agreement with the Village of Long Grove for the purposes of purchase and sale of water, subject to review and approval of the Village Attorney.

SECTION 3. If any section, paragraph, clause or provision of this Ordinance shall be held invalid, the invalidity thereof shall not affect any other provision of this Ordinance.

SECTION 4. This Ordinance shall be in full force and effect from and after its passage and approval and shall not be codified.

AYES: _____
NAYES: _____
ABSENT: _____
PASSED: _____, 2025
APPROVED: _____, 2025
PUBLISHED: _____, 2025

ATTEST:

_____
Janet M. Sirabian, Village Clerk

APPROVED:

_____
Eric N. Smith, Village President

DRAFT

smart. with heart.
50 Raupp Blvd, Buffalo Grove, IL 60089 847-459-2500 vbg.org

WATER PURCHASE AND SALE CONTRACT
BY AND BETWEEN
VILLAGE OF BUFFALO GROVE AND VILLAGE OF LONG GROVE

THIS WATER PURCHASE AND SALE CONTRACT (the "***Contract***") is made and entered into as of, _____, 202__, by and between the **VILLAGE OF BUFFALO GROVE, Illinois ("*Supplier*")** and **VILLAGE OF LONG GROVE**, **Illinois ("*Purchaser*")**, and in consideration of the mutual covenants and agreements herein contained.

SECTION 1 BACKGROUND

A. The Supplier owns and operates a Supplier Waterworks System for the receipt of Potable Water and for the delivery of Potable Water to its residents and other Customers.[1]

B. The Supplier Waterworks System derives its water from Lake Michigan pursuant to a Water Allocation from the State of Illinois Department of Natural Resources ("***IDNR***").

C. The Supplier issued and sold, and may in the future issue and sell, Bonds from time to time during the term of this Contract in sufficient amounts for the payment of acquiring, designing, constructing, and maintaining the Supplier Waterworks System.

D. The Purchaser owns and operates the Purchaser Waterworks System for the delivery of Potable Water to its customers.

E. The Purchaser Waterworks System is currently supplied by water wells.

F. The Purchaser desires to purchase Potable Water from the Supplier, and the Supplier desires to sell Potable Water to the Purchaser, solely for the purposes set forth in and in strict accordance with the provisions of this Contract. The Supplier and the Purchaser acknowledge that this is not an exclusive contract for the sale and purchase of water to the Purchaser.

G. Pursuant to the Illinois Municipal Code, 65 ILCS 5/1-1-1 *et seq.* (2020), the Intergovernmental Cooperation Act, 5 ILCS 220/1 *et seq.* (2020), and Article VII, Sections 6 and

[1] All capitalized words and phrases throughout this Contract shall have the meanings set forth in Section 2 hereof.

10 of the Illinois Constitution of 1970, the Supplier and the Purchaser are authorized to enter into this Contract.

H. The Purchaser recognizes that the Supplier may use this Contract as the basis, in part, for obtaining loans from time to time to be evidenced by the issuance of its Bonds; and for payment of the principal of and the premium, if any, and interest on such Bonds; and as the means for the payment of its maintenance and operating expenses; and for such purposes as may be authorized by applicable statutes or required in any Bond Ordinance adopted by the Supplier authorizing issuance of Bonds.

I. The Purchaser has previously secured a Water Allocation from the IDNR, and the Parties acknowledge that the Purchaser's maintenance of its Water Allocation for serving the Connection Area is a condition on the Purchaser's receipt, and the Supplier provision, of Potable Water pursuant to this Contract.

SECTION 2 DEFINITIONS

The following words and phrases shall have the following meanings when used in this Contract.

"Bonds" means Supplier Bonds and any revenue bonds issued by the Purchaser relating to the Purchaser Waterworks System.

"Bond Ordinances" means all of the respective bond ordinances and resolutions under which the Parties have or will authorize the issuance of, or issue, Bonds.

"Connection Area" means the area as depicted in Exhibit A, or as otherwise may be agreed upon by the Parties.

"Connection Facilities" means the Supplier Connection Facilities and the Purchaser System Connection Facilities.

"Connection Facilities Concept Plan" means the plans attached as Exhibit B to this Contract, which plans shall be the basis for the Construction Documents. This exhibit

demonstrates both the general connection point to the Supplier Waterworks System and the specific location of ownership divide within the connection vault.

"Construction Documents" means the designs, plans, and specifications to be prepared in accordance with Section 9.A of this Contract.

"Contract" means this Contract.

"Customer" means any person or entity to whom the Supplier directly sells Potable Water.

"Day" means any 24-hour continuous period commencing at 12:00 a.m. (midnight) local time.

"Delivery Date" means the date that the Supplier first delivers Potable Water to the Purchaser.

"Effective Date" means the last date of execution of the Contract by the Supplier and Purchaser.

"Fiscal Year" means the fiscal year of the Supplier.

"Force Majeure" means acts of God; strikes, lockouts, or other industrial disturbances; acts of a public enemy; orders of any kind of the Government of the United States, of the State of Illinois, or of any civil or military authority; insurrections; riots; acts of terrorism; epidemics; pandemics; landslides; lightning; earthquakes; fires; hurricanes; storms; floods; washouts; droughts; arrests; restraints of government and people; civil disturbances; civil actions by third parties affecting or threatening to affect obligations or undertakings of any Party under this Contract; eminent domain actions by any Party necessary or convenient to effect any obligation or undertaking of any Party under this Contract; explosions, breakage, or accidents to machinery, pipelines, plants, canals, or tunnels; and inability on the part of the Supplier to deliver Potable Water hereunder, or of the Purchaser to receive Potable Water hereunder, on account of any other causes not reasonably within the control or ability to cure of the Party claiming such inability.

"Maximum Water Supply Amount" means the maximum amount of Potable Water that the Supplier shall be obligated to deliver to the Purchaser, and that the Purchaser shall be authorized to purchase from the Supplier, pursuant to this Contract, which amount shall not exceed 260,000 (Two Hundred Sixty Thousand) gallons per day, unless otherwise agreed in writing from time to time by the Supplier and the Purchaser.

"Party" or ***"Parties"*** means either the Supplier, the Purchaser or both, as appropriate.

"Point of Delivery" means the first valve immediately downstream from the metering station at which the Potable Water delivered to the Purchaser pursuant to this Contract leaves the Supplier Waterworks System and enters the Purchaser Waterworks System.

"Potable Water" means treated, filtered water drawn from Lake Michigan provided to the Supplier.

"Purchaser" means the Village of Long Grove.

"Purchaser System Connection Facilities" means those portions of the Purchaser Waterworks System to be used to connect the Purchaser Waterworks System existing as of the Effective Date of this Contract to the Supplier Waterworks System, which facilities are generally depicted in the Connection Facilities Concept Plan. The Purchaser System Connection Facilities include, among other items, the valves, meter vaults with Supervisory Control and Data Acquisition ("***SCADA***") facilities integrated with the Supplier's Waterworks System, and other interior improvements with the Purchaser's Waterworks System described in this Contract and pipeline and equipment appurtenant thereto.

"Purchaser Waterworks System" means all of the Purchaser's facilities, including land; easements; rights-of-way over lands and waters; pumping facilities, wells, treatment facilities, storage facilities, metering stations, and other facilities; mains; and pipelines acquired and used (or to be used) for the purposes of transmitting and providing Potable Water; and operational systems for providing and managing the use of Potable Water to the Purchaser's customers within the Connection Area.

"Rate" means the customary and applicable rate for delivery of Potable Water established by the Supplier for a particular fiscal year.

"Trustee" means a trustee provided in a Bond Ordinance.

"Supplier" means the Village of Buffalo Grove, Illinois.

"Supplier Bonds" means the debt obligations, whether in the form of Supplier Revenue Bonds or other bonds, notes, or other evidences of indebtedness, to be issued by the Supplier in an amount sufficient to pay the expected costs to complete all of the Supplier's obligations under this Contract, including, without limitation, costs of construction and professional services.

"Supplier Connection Facilities" means the portions of the Supplier Waterworks System to be constructed pursuant to this Contract by the Purchaser after approval by the Supplier to connect the Purchaser Waterworks System, which facilities are generally depicted in the Connection Facilities Concept Plan. The Supplier Connection Facilities include, among other items, the metering station and SCADA facilities described in this Contract and pipelines and equipment appurtenant thereto.

"Supplier Revenue Bonds" means all of the Supplier's debt obligations to which revenues from the Supplier Waterworks System are committed, whether in the form of bonds, notes, or other evidences of indebtedness, in whatever original principal amount, together with any such revenue obligations authorized by law to be issued by the Supplier from time to time and refunding revenue obligations issued to refund other such obligations.

"Supplier Waterworks System" means all of the Supplier's facilities, including land; easements; rights-of-way over lands and waters; pumping facilities, treatment facilities, storage facilities, metering stations, and other facilities; mains; and pipelines acquired and used for the purposes of transmitting Potable Water to the Supplier residents and Customers. The Supplier Waterworks System includes the metering station and all meters and other equipment located therein constructed as part of the Supplier Connection Facilities.

"Water Allocation" means an authorization to divert a specified quantum of Lake Michigan water for use as Potable Water pursuant to the Level of Lake Michigan Act, 615 ILCS 50/1 *et seq.* (2020), as amended from time to time; the Illinois Department of Natural Resources Rules and Regulations for the Allocation of Water from Lake Michigan, 92 III. Admin. Code Part 730, as amended from time to time; applicable Illinois Department of Natural Resources Decisions, as amended from time to time.

"Well Water" means either treated, filtered water or untreated, unfiltered water drawn from wells owned and, operated by the Purchaser.

SECTION 3 SUPPLEMENTAL WATER SUPPLY

A. Agreement to Sell and Purchase. Subject to all provisions of this Contract, the Supplier shall sell and deliver to the Purchaser, and the Purchaser shall purchase and receive from the Supplier, an amount of Potable Water not to exceed the Maximum Water Supply Amount for use in the Connection Area. The Connection Area shall not be modified or expanded without prior written consent of Supplier. This amount includes municipal use, system leakage, and metering losses located beyond the Point of Delivery. The Supplier's obligation to the Purchaser to deliver Potable Water hereunder shall be limited to this amount.

B. Beginning of Obligations to Deliver and Receive Potable Water. The Supplier shall be obligated to deliver Potable Water to the Purchaser Waterworks System, and the Purchaser shall be obligated to receive at the Purchaser Waterworks System Potable Water delivered by the Supplier, immediately after completion of construction of the Point of Delivery and any other Purchaser System Connection Facilities and any Supplier Connection Facilities and inspection and approval for operation thereof by the Supplier and any other regulatory agency (the "***Commencement Date***"). This paragraph includes any water used to test or prepare the Purchaser System Connection Facilities.

C. Limits on Supply. The Supplier shall use its best efforts to furnish Potable Water to the Purchaser as hereinabove provided, but the Purchaser acknowledges and agrees that the Supplier's obligation hereunder is limited by:

i. The amount of Potable Water available to the Supplier from time to time;

ii. The Purchaser maintaining a Water Allocation for the Connection Area, as governed by 615 ILCS 50 and any subsequent administrative rulings issued by the State of Illinois and/or its departments;

iii. The continuation or diminishment of the Supplier's Lake Michigan Water Allocation as governed by 615 ILCS 50 and any subsequent administrative rulings issued by the State of Illinois and/or its departments;

iv. Water supply curtailment by the Northwest Water Commission or the City of Evanston (as the suppliers of the Supplier Waterworks System), during urgent or emergent conditions;

v. The capacity of, and any risk of harm to, the Supplier Waterworks System due to the furnishing of Potable Water;

vi. Ordinary transmission loss, including standard metering error, between the Supplier's source of supply and/or the Point of Delivery to the Purchaser Waterworks System;

vii. Supplier's agreement with the Northwest Water Commission;

viii. The Northwest Water Commission's agreement with the City of Evanston or another source of Potable Water (and Purchaser further acknowledges that any Supplier arrangement with an alternative source of Potable Water may affect the costs to Supplier for Potable Water that, in turn, may impact the Rate charged to Purchaser);

ix. The Provisions of this Contract; and

x. Force Majeure.

D. Additional Subsequent Customer. The Purchaser acknowledges that the Supplier may enter into contracts for the sale by the Supplier of Potable Water to Customers other than

the Purchaser. The Parties acknowledge that the rates for the sale of Potable Water in such contracts may affect the rates charged to the Purchaser pursuant to this Contract; provided, however, that the Supplier acknowledges and agrees that the rates charged to the Purchaser shall be no higher than the rates charged to such other Customers.

E. Emergency or Maintenance Stoppage or Flow Reduction. The Supplier undertakes to use reasonable care and diligence to provide a constant supply of Potable Water as herein provided, but reserves the right at any time to cease or reduce the flow of Potable Water in its mains for emergency and maintenance purposes. The Supplier shall give notice not less than 48 hours in advance of any stoppage for scheduled maintenance purposes and it shall give such notice as is reasonable under the particular circumstances of any cessation or reduction of flow for emergency purposes. The Supplier shall provide as much notice as practical where the flow of water is expected to be reduced temporarily.

F. Limits on Use. Potable Water delivered by the Supplier to the Purchaser pursuant to this Contract shall be used solely for the purpose of resale by Purchaser for use within the Connection Area. Neither the Purchaser nor any customer of the Purchaser shall sell or resell Potable Water to anyone outside the Connection Area, or for use outside of the Connection Area, without the written approval of the Supplier.

SECTION 4 QUALITY; DELIVERY; STORAGE; DISTRIBUTION; CONSERVATION

A. Water Quality. The Supplier shall supply the Purchaser with Potable Water of a quality commensurate to that furnished to the Supplier's residents. The Supplier bears no responsibility for the contamination of Potable Water or deterioration of water quality occurring beyond the Point of Delivery to the Purchaser Waterworks System.

B. Maintenance of System; Water Quality; Prevention of Waste. The Purchaser shall operate the Purchaser Waterworks Systems in such a manner as at no time to place the Supplier Waterworks System in jeopardy of failing to meet (i) the regulations of any federal, State of Illinois, or local agency or governmental authority having jurisdiction over the operation of the Supplier

Waterworks System or (ii) the commitments the Supplier has to its residents and to its water suppliers. The Purchaser shall notify the Supplier immediately of all emergency and other conditions that may directly or indirectly affect quantity or the quality of the Potable Water to be received under this Contract or the Supplier Waterworks System or water supply. The Purchaser further agrees to take reasonable measures to conserve water.

C. No Use of Wells and Well Water. The Purchaser warrants and represents that upon receiving water pursuant to this Contract it will not distribute well water through the Purchaser Waterworks System to its Potable Water customers in the Connection Area and will not do so in the future without the written consent of the Supplier, except as may be provided in Purchaser's emergency operations plan in accordance with 35 IL Admin. Code 604.135(d) [but only so long as any use of well water pursuant to Purchaser's emergency operation plan does not disrupt or otherwise impair Supplier Waterworks System].

D. Surges and Back-Flows. The Purchaser's operation of the Purchaser Waterworks System, including, without limitation, its pressure adjusting stations, shall not cause surges or back-flows into the Supplier Waterworks System, and any connection between the Supplier Connection Facilities and/or Supplier Waterworks System and the Purchaser System Connection Facilities shall be provided with air gap protection. The Supplier shall not be responsible for any damage to the Purchaser Waterworks System caused by the design, operation, or maintenance of the Purchaser Waterworks System.

E. Purchaser Waterworks System Pressures. The Purchaser shall be solely responsible for delivering Potable Water to its customers at pressures required or necessary to make such delivery.

F. Rate of Withdrawal. The Purchaser will take Potable Water at the most uniform and continuous rate of withdrawal practicable.

G. Connection to Transmission Mains. Except for the Connection Facilities and any Interconnection Facilities as authorized pursuant to Section 17 of this Contract, the Purchaser

shall not construct or install, nor permit to be constructed or installed, any taps from or connections to the Supplier Waterworks System. Such prohibited taps and connections shall include, without limitation, distribution mains, valves, fire hydrants and service lines. Nor shall Purchaser construct taps on the Purchaser Waterworks System within sixty feet (60') of the Point of Delivery, without written consent of the Supplier.

H. Purchaser System Connection Facilities. The Purchaser, at its own expense and pursuant to the schedule established by this Contract, shall site, design, construct, operate, maintain, and when necessary replace the Purchaser System Connection Facilities in general conformity with the Connection Facilities Concept Plan. Construction Documents for the Purchaser System Connection Facilities, and any future modifications thereof (except for minor field variations occurring in the ordinary course of installing or repairing the Purchaser System Connection Facilities), shall be submitted in advance of construction or modification to the Supplier for review and approval in accordance with Section 9.A of this Contract.

SECTION 5 MEASURING EQUIPMENT

A. Metering Station.

i. Construction of Metering Station. The Purchaser shall, pursuant to the schedule established by this Contract, furnish and install the metering station serving the Point of Delivery containing the necessary equipment and devices of a type meeting the standards of the American Water Works Association and the Ordinances of the Supplier, and as determined in the sole discretion of the Supplier, for measuring properly the quantity of Potable Water delivered under this Contract, including all structures as the Supplier shall deem necessary to house such equipment and devices. Such furnishing and installing of the metering station shall be done in substantial conformity with the Construction Documents, as such Construction Documents may be revised by mutual agreement of the Supplier and the Purchaser. After construction is completed by the Purchaser, the Purchaser shall convey to the Supplier, and the

Supplier shall own, operate, maintain, and replace, such metering station and all equipment and structures related thereto as part of the Supplier Connection Facilities.

ii. Site of Point of Delivery Metering Station. The metering station for the Point of Delivery shall be located within the Connection Area in a specific location to be mutually determined by the Supplier and the Purchaser. Water shall be delivered at atmospheric pressure such that an air gap exists between the Supplier Waterworks System and the Purchaser System Connection Facilities.

iii. Access by Supplier. The Supplier shall have access to the metering station for examination and inspection in a manner to be mutually agreed by the Parties. The reading of the meters for billing purposes, and the calibration and adjustment of the meters and other equipment in the metering station pursuant to Section 5.C, shall be done only by the employees or agents of the Supplier at the cost of the Purchaser; provided, however, all calibration and adjustment work shall be mutually approved prior to its commencement.

iv. Meter Reading. The Supplier intends to read the meters in the metering station on the first day of each month. Reads may be accomplished through the Supplier's remote advanced metering infrastructure (AMI) system in lieu of actual site visits.

B. Records. For the purpose of this Contract, the official record of readings of each meter at the metering station shall be the handwritten journal or other handwritten or electronic record book of the Supplier in its office in which the records of the employees or agents of the Supplier who take the readings are or may be transcribed or entered. Upon written request of the Purchaser, the Supplier will give the Purchaser a copy of such handwritten journal or electronic record book or permit the Purchaser to have access thereto in the office of the Supplier during regular business hours.

C. Calibration. The Supplier shall calibrate its meters at least once in each Fiscal Year measuring the Potable Water delivered to the Purchaser Waterworks System. If requested in writing by the Purchaser to do so, said calibration shall be in the presence of a representative of

the Purchaser, and the Supplier and the Purchaser shall jointly observe any adjustments that are made to the meters in case any adjustments shall be necessary. If any check meters have been installed, then such check meters shall be calibrated by the Purchaser, if requested in writing by the Supplier to do so, at least once in each Fiscal Year in the presence of a representative of the Supplier, and the Supplier and the Purchaser shall jointly observe any adjustments that are made to the check meters in case any adjustments shall be necessary.

D. Check Meters. The Purchaser, at its option and its own expense, may install and operate a check meter to check each meter installed by the Supplier. Notwithstanding the foregoing, the measurement of Potable Water for purposes of this Contract shall be solely by the Supplier's meters, except in the cases hereinafter specifically provided to the contrary. All check meters shall be of standard make and shall be subject to inspection and examination by any employee or agent of the Supplier at all reasonable times following notice to the Purchaser. The calibration and adjustment of check meters shall be made only by the Purchaser, except during any period when a check meter may be used under the provisions hereunder for measuring the amount of Potable Water delivered to the Purchaser, in which case the calibration and adjustment of such check meter shall be made by the Supplier in the same manner as if such check meter had been furnished and installed by the Supplier.

E. Meter Malfunctions. If the Supplier or the Purchaser at any time observe a variation between a meter and a check meter or any evidence of meter malfunction, such Party shall promptly notify the other Party; the Supplier and the Purchaser shall then cooperate to procure an immediate calibration test and such adjustment, replacement, or other work necessary to return such meter to accuracy. The Party who discovers such variation or malfunction shall give the other Party notice not less than 72 hours prior to the time of any test of any meter (which tests shall be conducted, if practical, during normal working hours) so that the other Party may conveniently have a representative present. If such representative is not present after the required notification at the time set in such notice, calibration and adjustment may proceed in the absence

of said representative notwithstanding any other provision of this Subsection. If the percentage of inaccuracy of any meter is found to be in excess of two percent between the check meter and the Supplier meter, registration thereof shall be corrected by agreement of the Supplier and Purchaser based upon the best data available, for a period extending back to the time when such inaccuracy began if such time is ascertainable, or for a period extending back one-half of the time elapsed since the last date of calibration (but in no event further back than a period of six months) if such time is not ascertainable.

If for any reason any meter is out of service or in disrepair so that the amount of Potable Water delivered cannot be ascertained or computed from the reading thereof, then the Potable Water delivered during the period such meter is out of service or in disrepair shall be deemed to be the registration of the check meter if one has been installed and is registering accurately, or, in the event that no check meter has been installed or the check meter is registering inaccurately, shall be estimated and agreed by both the Supplier and Purchaser:

i. By correcting the error if the percentage of the error is ascertainable by calibration tests or mathematical calculations; or

ii. If the error is not ascertainable by calibration tests or mathematical calculation against the meter data, by estimating the volume of water that entered the Purchaser reservoir through the Purchaser's tracking procedure for reservoir level and calculations using the size and shape of that reservoir; or

iii. If the error is not ascertainable by calibration tests or mathematical calculation or volume estimates in the reservoir, by estimating the quantity of delivery by considering deliveries during preceding periods under similar conditions when the meter or meters were registering accurately. During any period of such disagreement, the Supplier's estimate of water delivered shall be used for the purpose of computing payments due under Section 7 of this Contract, and any adjustments based upon later resolution of such disagreement

shall be made by appropriate adjustments to the Purchaser's future payments pursuant to Section 7.

F. Removal of Metering Station. At any time after 90 days following the termination of this Contract without renewal, the Supplier, at its own expense and in its discretion, may remove the metering station, including equipment, and any SCADA antennas and appurtenant facilities included among the Supplier Connection Facilities, and shall release any perpetual easements therefor.

G. Removal of Transmission Mains. Within 120 days after the termination of this Contract without renewal, the Purchaser, at its own expense, shall remove or abandon in place any Purchaser transmission mains and other equipment and appurtenances owned by the Purchaser that are located on Supplier property. Any proposal by the Purchaser to abandon in place shall be subject to the prior review and approval by the Supplier. The Purchaser shall be solely responsible for completing all restoration work necessary as a result of the removal of the same.

H. Meters for Purchaser Customers. The Supplier shall have no responsibility for ensuring that the Purchaser customers have operable water meters meeting the standards of the American Water Works Association.

I. Right of Inspection. The Supplier reserves the right to inspect the property of the Purchaser System Connection Facilities to ensure that the facilities are being operated consistent with the terms of this Contract, including but not limited to inspections to ensure there are no cross connections that threaten potential contamination to the Supplier Waterworks System and to ensure that the Supplier Waterworks System is otherwise fully in accordance with state and federal law. Such inspections shall occur following notice to the Purchaser and at a mutually acceptable time during ordinary business hours. If the inspection discloses any code violations or threats to the Supplier Waterworks System, the Supplier shall deliver the Purchaser a notice at the address listed in Section 20 hereof of the Supplier's intention to shut off the supply of water

to the Purchaser at the expiration of 48 hours after giving such notice unless within the 48-hour period the Purchaser shall cure said threats to the Supplier Waterworks System. The foregoing notwithstanding, in the event such threats to the Supplier Waterworks System constitute an emergency, the notice required of the Supplier shall be no more than is reasonable under the circumstances.

SECTION 6 UNIT OF MEASUREMENT

The unit of measurement for Potable Water delivered hereunder shall be gallons of water, U.S. Standard Liquid Measure, and all measuring devices shall be so calibrated unless the Supplier and the Purchaser agree otherwise in writing. Should it become necessary or desirable to use other units of measurement, the basis of conversion shall be that 7.48 gallons is equivalent to one cubic foot.

SECTION 7 RATES AND TERMS OF PAYMENT

A. Rate. The Rate to be charged to the Purchaser for the provision of Potable Water shall be based on actual monthly usage by the Purchaser and shall be the lowest rate established from time to time by the Supplier for the provision of Potable Water to its residents. Provided, however, that, if the Supplier adjusts its residential rates to incorporate other charges or services unrelated to the provision of Potable Water, the Rate charged to the Purchaser shall be that portion of the residential rate related solely to the provision of Potable Water. Provided further that any usage by the Purchaser in excess of the Maximum Water Supply Amount shall be charged an additional $.10 (ten cents) on said Rate.

B. Adjustments to Rate and Fixed Facility Fees. Rates and Fixed Facility Fees (as described in Section 7.C) will be examined by the Supplier and shall be subject to annual adjustment by the Supplier. The Supplier shall set the Rate and Fixed Facility Fees in conformity with the standards set forth in Section 7.J of this Contract. Any such adjustments in Rate or Fixed Facility Fees will not be effective until the next applicable billing period commencing not more than ninety (90) days after the Supplier approves such adjustment; provided, however, that, if the

Supplier does not notify the Purchaser of any such adjustments within 10 days after their approval (an "***Adjustment Notice***"), the aforementioned 90-day period shall be calculated from the date of the Adjustment Notice rather than the date of approval of the adjustment. Such adjustments may be made without the need for hearings, but:

1. Within 15 days after the delivery of an Adjustment Notice, the Purchaser shall notify the Supplier whether it intends to undertake a rate review (a "***Review Notice***"). A Review Notice shall be delivered in accordance with Section 20.B of this Contract.

2. The Purchaser may, within 45 days after the Review Notice, deliver to the Purchaser its own study regarding any adjustment to the Rate or Fixed Facility Fee (a "***Secondary Rate Study***"). Upon timely delivery of a Secondary Rate Study from the Purchaser, the Supplier agrees to consider such Secondary Rate Study and take action either to re-affirm, ratify, modify, or postpone the effective date of such adjustments in either the Rate, Fixed Facility Fee, or both.

C. Fixed Facility Fee. A monthly fee shall be charged to the Purchaser based on the size of the water meter installed in the metering station included among the Supplier Connection Facilities. The monthly Fixed Facility Fee shall be charged at the lowest rate established from time to time by the Supplier for multifamily residential users, commercial users, or industrial users located within the Supplier (as defined in the Supplier's municipal code) with comparably sized meters. To the extent that the Purchaser's water meter is not comparable in size to the meters serving any multifamily residential users, commercial users, or industrial users located within the Supplier, the monthly Fixed Facility Fee charged to the Purchaser shall be proportionate to the difference in meter sizes. For illustration purposes, if the Purchaser water meter is 4" in size and the next largest meter among multifamily residential users, commercial users, or industrial users located within the Supplier is 2", the monthly Fixed Facility Fee charged to the Purchaser shall not be greater than twice the lowest Fixed Facility Fee charged to multifamily residential users, commercial users, or industrial users located within the Supplier with 2" meters.

D. Reserved.

E. Bills and Due Date. The Supplier shall render bills to the Purchaser bi-monthly based upon:

(i) Fixed Facility Fees incurred; and

(ii) charges based on actual volume of Potable Water delivered by the Supplier,

during the relevant billing period pursuant to this Contract. Payment on bills rendered by the Supplier shall be due from the Purchaser within 45 days after delivery.

F. Disputed Payments. If the Purchaser desires to dispute any payment, or part thereof, due or claimed to be due under this Contract, the Purchaser shall nevertheless pay the full amount of any such payment when claimed by the Supplier to be due and shall provide written notification to the Supplier that charges are disputed, the grounds for dispute, and the amount in dispute, by the later of (i) the due date of such payment, or (ii) 45 days after the date that the Purchaser is reasonably informed of the circumstances giving rise to such dispute. No adjustment or relief on account of any disputed charges shall be made unless disputed charges are the subject of such notice within the time herein specified. It is expressly understood and agreed that no dispute over payments due or claimed to be due under this Contract shall be referred to arbitration for review or settlement. Upon receipt of a notification of dispute, representatives of the Supplier shall meet with representatives of the Purchaser to resolve such dispute. In the event the dispute is resolved in favor of the Purchaser, a credit will be made on the next bill of the Purchaser. In the event that the dispute is not so resolved, the Purchaser shall have the right to seek redress in the Circuit Court of Lake County, Illinois.

G. Overdue Payments. If the Purchaser shall fail to make any payment required under this Contract on or before its due date, and after notice and an opportunity to cure as set forth in Section 19.A.i of this Contract has been exhausted, the Supplier shall have the right to exercise any or all of the following three remedies:

i. Interest. The Supplier, at is option and in its discretion, may collect from the Purchaser, and the Purchaser shall pay to the Supplier, interest on the amount of such payment, at a rate of nine percent (9%) per annum or the rate generally imposed upon other Customers of the Supplier, whichever is less. Such interest shall accrue and shall be compounded on a monthly basis from the date such payment becomes due until paid in full with interest as herein specified.

ii. Reduction or Discontinuance of Delivery. If such payment is not made by the Purchaser within 30 days after the date such payment becomes due, then the Supplier, at its option and in its discretion, and whether or not such payment is disputed, may reduce or discontinue delivery of Potable Water to the Purchaser Waterworks System until the amount due to the Supplier is paid in full with interest as herein specified. The Supplier shall give notice to the Purchaser of its intention to reduce or discontinue delivery of Potable Water in accordance with this Subsection, which notice shall be delivered to the Purchaser not less than 10 business days prior to such event. If the Purchaser so requests in writing prior to the time for reduction or disconnection of service, the Supplier shall provide the Purchaser an opportunity for a hearing, and no reduction or discontinuance of service shall occur sooner than 10 business days after the Supplier notifies the Purchaser of the outcome of such hearing. If the Supplier reduces or discontinues the delivery of water pursuant to this Subsection, the Purchaser shall continue to be liable to make all payments for any water used in accordance with this Contract.

iii. Security Deposit.

a. Purpose. In order to ensure receipt of payment for Potable Water delivered by Supplier to Purchaser:

1. Initial Deposit. Purchaser shall, as a further obligation under this Contract, deposit in a separate interest bearing account in the Supplier's name, with authorized signatories as designated by the Supplier's Manager, a sum of money in the amount of $50,000.00, as security for the payment of the Purchaser's obligations hereunder and other obligations required under this Contract.

Except to the extent Purchaser is required to provide a security deposit pursuant to Section 7.G.iii.a.2 of this Contract:

A. Upon the first anniversary of the Commencement Date, the initial deposit shall be reduced to $25,000.00, with Supplier returning $25,000.00 of such initial deposit to Purchaser; and

B. Upon the second anniversary of the Commencement Date, the balance of the initial deposit shall be released by Supplier and returned to Purchaser.

2. Default Security Deposit. If the Purchaser is at any time in default on any payment due under this Contract and the default is not cured within 65 days after the due date of the defaulted payment, then the Supplier, at its option and in its discretion, may require Purchaser, as a further obligation under this Contract, to deposit in a separate interest bearing account in the Supplier's name, with authorized signatories as designated by the Supplier's Manager, a sum of money in a reasonable amount determined by the Supplier (but in no event more than the actual amount due from Purchaser or the average amount of two-month billing cycles over the prior 12-month period preceding such default, whichever is greater), as security for the payment of the Purchaser's obligations hereunder. The Purchaser's compliance with the Supplier's demand for such a security deposit shall be a condition precedent to the curing of such Purchaser's default and the restoration of the Potable Water service to the Purchaser Waterworks System, if such Potable Water service has been reduced or discontinued by reason of such default.

Supplier's recovery for any of Purchaser's defaults under this Contract shall not be limited by the amount of any security deposit made pursuant to this Subsection 7.G.iii.a.

b. Use; Restoration. The security deposit or any part thereof may be applied, at the Supplier's option and in its discretion, to any subsequent default by the Purchaser in any payments due under this Contract. If so applied, the Purchaser shall provide funds immediately to restore the security deposit to the amount required by the Supplier.

c. Return. At the earliest of the end of the term of this Contract, or a term of two years after the curing of the most recent default by the Purchaser, or such earlier time that the Supplier at its option and in its discretion may determine, any security deposit with all

accrued interest shall be returned to the Purchaser if the Purchaser has performed all its obligations under this Contract.

H. Beginning of Obligation to Pay. Notwithstanding any other provision of this Contract, the Purchaser's obligation to make any and all payments under this Contract shall begin with the issuance by the Supplier of the first bill issued after the first delivery of water to the Purchaser Waterworks System or any portion thereof. This obligation includes, but it not limited to, any water used to test or prepare the Purchaser Waterworks System.

I. Rate Agreed to be Reasonable. The Purchaser agrees that it has had an opportunity to evaluate the Rates to be charged under this Contract. The Purchaser further unconditionally agrees that the initial Rates in this Contract are reasonable and non-discriminatory, and the Purchaser hereby expressly waives any and all claims challenging the initial Rates and initial Fixed Facility Fees in any way.

J. Supplier Charges and Rates Covenant. The Supplier hereby covenants at all times to establish such charges and rates for water supplied to the Purchaser as will be sufficient: (1) to pay the costs of operation and maintenance of the Supplier Waterworks System; (2) to provide an adequate depreciation fund for the Supplier Waterworks System as determined by the Supplier on the basis of its statutory duties and its obligations under the Bonds and ordinance or ordinances authorizing the issuance of the Bonds; (3) to pay the principal of, at maturity or pursuant to mandatory redemption requirements, premium, if any, and interest on the Bonds; (4) to comply with the covenants of the ordinance or ordinances authorizing the issuance of the Bonds; and (5) to carry out reasonable and necessary undertakings to maintain the safety and reliability of the Supplier Waterworks System.

For purposes of this paragraph J, a "sufficient" amount shall mean an amount adequate (but not more than reasonably necessary), when taken together with any and all other amounts available, in the reasonable discretion of the Supplier, to enable the Supplier to meet its obligations and responsibilities as they come due, including without limitation the making of all

deposits required to be made under the ordinance or ordinances authorizing the issuances of the Bonds and for maintenance of a reserve fund.

K. Purchaser Charges and Rates Covenant. The Supplier acknowledges that the Purchaser has the independent right to establishes rates, fees, and charges for its customers within the Connection Area. In setting such rates, fees, and charges, the Purchaser hereby covenants that they will be sufficient at all times (1) to pay the costs of operation and maintenance of Purchaser Waterworks System, (2) to provide an adequate depreciation fund therefor, (3) to pay the principal of and interest on all Purchaser Bonds payable from the revenues of the Purchaser Waterworks System, (4) to pay the charges and rates established by the Supplier for the sale of water by the Supplier to the Purchaser. The Purchaser agrees to approve initial rates sufficient to satisfy this rate covenant not later than 35 days after execution of this Contract and shall file its rate ordinances with the Supplier within 35 days after adoption.

L. Character of Payment Obligations as Water Revenue Obligations. This Contract shall not be construed to constitute an indebtedness of the Purchaser within the meaning of any statutory or constitutional limitation. It is expressly understood and agreed that all payments to be made hereunder by the Purchaser may be required to be made only from revenues to be derived from the operation of its Purchaser Waterworks System, and this Contract shall be a continuing, valid and binding obligation of the Purchaser payable from such revenues throughout the term hereof. Without in any manner limiting the foregoing provisions of this paragraph L, it is also expressly understood and agreed that the aforesaid revenues from the operation of the said Purchaser Waterworks System shall remain available for payments due or claimed to be due under this Contract without regard to any designation of such revenues by the Purchaser from time to time as operating revenue, retained earnings, reserves, surplus, or otherwise. Nothing in this Paragraph L or this Contract shall, however, prohibit the Purchaser from using any other legally available funds for payments due hereunder.

M. Character of Payment Obligations as Operating Expenses. Inasmuch as obtaining water is an essential item of expense of a waterworks system, Purchaser hereby represents and covenants that all payments required to be made by it pursuant to the provisions of this Contract shall constitute operating expenses of the Purchaser Waterworks System and that such payments will constitute operation expenses as to any and all revenue bonds of the Purchaser which are supported in whole or in part by a pledge of the revenues of its Purchaser Waterworks System, with the effect that such Purchaser's obligation to make payment from its water revenues under this Contract has priority over its obligation to make payments of the principal or any interest on any such bonds which are or will be supported in whole or in part by a pledge of that Purchaser's Waterworks System revenues. Consistent with this paragraph M, Purchaser hereby covenants and agrees that from and after the date of this Contract, any ordinance or resolution to be passed by it authorizing the issuance of Purchaser obligations to be paid from the revenues of its Purchaser Waterworks System shall expressly provide that the revenues of the Purchaser Waterworks System may be used to pay the principal of and interest on such obligations only to the extent that those revenues exceed amounts require to pay the operating expenses of the Purchaser Waterworks System, including all payments to be made by it under this Contract regardless of whether water is being delivered or is ever delivered to the Purchaser hereunder. Without in any manner limiting the foregoing provisions of this paragraph M, it is also expressly understood and agreed that the obligation of the Purchaser under this Contract shall be enforceable against and collectable from any monies from time to time available in any accounts or funds, including reserve and surplus accounts, maintained by the Purchaser in connection with the Purchaser Waterworks System.

SECTION 8 SPECIAL CONDITIONS AND COVENANTS

A. No Liability for Delay. The Purchaser acknowledges and agrees that the Supplier shall not be liable to the Purchaser or to any of the Purchaser's customers for any damages occasioned by or in any way related to delay or failure in the delivery of Potable Water to the

Purchaser Waterworks System, except if the Supplier willfully delays or discontinues water service in breach of this Contract.

B. Title to Potable Water. Title to all Potable Water supplied hereunder shall remain in the Supplier to the Point of Delivery and thereupon shall pass to the Purchaser.

C. Covenants to Be Set Out in Bond Ordinances. The Purchaser acknowledges and agrees future Bond Ordinances of the Supplier may grant to bondholders certain rights and duties of the Supplier, and that such bondholder rights may be included in any subsequent Bond Ordinances of the Supplier.

D. Other Financial Obligations of Purchaser Waterworks System.

i. Payment Obligations. The Purchaser shall make all budgetary, emergency, and other provisions and appropriations necessary to provide for and authorize the prompt payment to the Supplier of all amounts due under this Contract.

ii. Future Purchaser Debt. In any revenue bond, indenture, or other evidence of indebtedness hereafter issued by the Purchaser for the Purchaser Waterworks System, the obligation for payment established pursuant to this Contract shall be expressly provided and set forth in the ordinances or resolutions providing for the issuance of such bonds, indentures, or other evidence of indebtedness.

E. Purchaser Jurisdiction. The Purchaser shall not serve any customers outside of the Connection Area without the express prior written agreement of the Supplier.

F. Maintenance and Operation of City Waterworks System. The Purchaser shall own and maintain the Purchaser Waterworks System, and all improvements and extensions of said System, in good repair and working order, shall operate said System efficiently, shall take all steps reasonably necessary so that said System may at all times be operated properly and advantageously, and shall punctually perform all duties with respect to said System as may be required by this Contract, and by the Constitution and laws of the United States of America and the State of Illinois and all other applicable laws. In addition, Purchaser shall carry insurance or

other risk management protection on its Purchaser Waterworks System of the kinds and in the amounts which are customarily carried by parties operating similar facilities.

G. Purchaser Regulations Equivalent to Supplier Regulations. The Purchaser shall enact regulatory measures regarding the supply and use of Potable Water within the Connection Area, including, without limitation, lawn sprinkling, that are at least as restrictive as the strictest among those adopted by the Supplier. In the event that the Supplier adopts new or amendatory regulations regarding the supply and use of Potable Water that are generally applicable in the Supplier's corporate limits (or in the event that the Supplier notifies the Purchaser that its regulations do not comply with this Subsection 8.G), then the Purchaser shall adopt or amend its regulations affecting the Purchaser Waterworks System within 60 days after notice thereof from the Supplier, except that: (i) if any Supplier regulations do not comport with standards of the Illinois Environmental Protection Agency, then the Supplier shall be required to demonstrate a need for such regulatory variance; and (ii) to the extent such regulatory change requires modifications to the Purchaser Waterworks System,

H. Accounting and Audit. The Purchaser shall, within six months after the close of each of its fiscal years occurring during the term of this Contract, provide to the Supplier complete annual audited financial statements of the Purchaser, which may be on a consolidated basis, duly certified by the Purchaser's independent certified public accountants.

I. Maintain Ownership of Purchaser Waterworks System. Subject to the proper exercise by a governmental authority of its powers of eminent domain including its power to acquire property in lieu of obtaining judgment in an eminent domain action, the Purchaser shall continue to own and possess the Purchaser Waterworks System and, within the exercise of reasonable business judgment and in a manner so as not to cause a default hereunder, shall dispose of property which is part of said System only to the extent that such property is no longer useful or profitable in the operations of said System; provided, however, that the Purchaser shall not have the right to convey ownership of the Purchaser Waterworks System during the term of

this Contract without the approval of the Supplier, which approval shall not be unreasonably withheld.

J. Release and Indemnification. The Purchaser hereby releases the Supplier from, agrees that the Supplier shall not be liable for, and agrees to indemnify and hold the Supplier harmless from:

(1) any liabilities for any loss or damage to property or any injury to, or death of, any third party that may be occasioned by or related to any cause whatsoever pertaining to: (a) the provision of Potable Water under this Contract; or (b) construction, installation, removal, relocation, replacement, extension, improvement, maintenance, or operation of the Purchaser Waterworks System or to the Connection Facilities; or

(2) any liabilities, losses, or damages, or claims therefor, arising out of the failure, or claimed failure, of the Purchaser to comply with its covenants or obligations contained in this Contract, including, in each such case, any attorneys' fees,

(all of the matters in phrases (1) and (2) being referred to individually as a "Claim" and collectively as the "Claims"). The Purchaser agrees to indemnify and hold the Supplier harmless to the fullest extent permitted by law from any losses, costs, charges, or expenses, in connection with any Claim, whether such Claim is asserted in an action, suit, or proceeding instituted or threatened by any third party in connection with any such Claim. If any Claim is asserted, the Supplier shall give prompt notice to the Purchaser, and the Purchaser, if requested by the Supplier, shall assume the defense thereof, it being understood, however, that: (c) the Purchaser shall not settle or consent to the settlement of any such Claim without the written consent of the Supplier, and (d) the Supplier shall be entitled to approve the counsel selected by the Purchaser for any such defense. This paragraph shall in no way be construed to be, nor shall it be, a waiver of any immunity that the Supplier and/or Purchaser may assert to any Claim.

K. Assignment of Litigation. The Purchaser shall promptly notify the Supplier of any litigation or administrative or other proceeding concerning this Contract or which may in any way limit any Party's ability to perform any of the obligations of this Contract. Upon request of the Supplier, the Purchaser shall promptly assign to the Supplier the right to prosecute, defend, or intervene in any litigation or administrative or other proceeding, to which the Purchaser is a party or in which the Purchaser is involved, that involves or arises out of the limitation of the Party's obligation as set forth in this Contract. Upon assignment, the Supplier shall be responsible for all costs and expenses of the litigation or administrative or other proceeding.

L. Immunities and Defenses. Nothing contained in this Section or this Contract shall constitute a waiver by any Party of any available right, privilege or defense under statutory or common law, including, but not limited to, the Illinois Local Governmental and Governmental Employees Tort Immunity Act, 745 ILCS 10/1-101, *et seq*., as amended.

SECTION 9 SCHEDULE FOR COMPLETION OF VARIOUS FACILITIES

A. Plans and Specifications for Purchaser System Connection Facilities and Supplier Connection Facilities. The Purchaser shall prepare, and submit to the Supplier for its review and approval, complete detailed plans, specifications, and construction contract documents (collectively the "***Construction Documents***") for the Purchaser to construct the Purchaser System Connection Facilities and the Supplier Connection Facilities. The Construction Documents shall be in general conformity to the Connection Facilities Concept Plan and shall include any valves and/or pressure adjusting stations as may be required immediately downstream from the Point of Delivery. The Supplier shall provide its comments and revisions on the Construction Documents to the Purchaser within 60 days after receipt of those documents. The Purchaser shall make all required changes to the Construction Documents necessary to ensure compliance with this Contract.

B. IEPA and Other Approvals For Purchaser System Connection Facilities and Supplier Connection Facilities. The Purchaser shall, within 60 days after receipt of Supplier's

comments and revisions pursuant to Subsection 9A above, submit the final Construction Documents for approval and permitting to the Illinois Environmental Protection Agency (the "IEPA") and each other federal, state, or local governmental body having jurisdiction over the Purchaser System Connection Facilities and Supplier Connection Facilities, and shall diligently pursue each such approval and permit until it is secured.

C. Commencement of Construction of Purchaser System Connection Facilities and Supplier Connection Facilities. The Purchaser shall cause construction of the Purchaser System Connection Facilities and Supplier Connection Facilities to be commenced within 120 days after the Purchaser receives the last approval from any governmental body required as a condition precedent to construction of the Purchaser System Connection Facilities and Supplier Connection Facilities (including the metering station therefor). The Purchaser shall cause construction to be pursued diligently and continuously until it is completed.

D. Transfer of Property Rights/Payment Covenant/Oversizing.

i. Conveyance of Purchaser Easement. The Purchaser shall grant to the Supplier all necessary easements for the Supplier metering station and other Supplier Connection Facilities to be constructed on Purchaser owned or controlled property pursuant to this Contract.

ii. Acquisition of Property. The Purchaser shall commence all actions necessary to acquire all property rights not already owned by it necessary to fulfill the requirements of this Contract.

iii. Payment Covenant. It is expressly understood and agreed that the Purchaser shall be responsible for the design, construction, and payment of the Purchaser System Connection Facilities and Supplier Connection Facilities. It is further agreed that, upon completion and approval of the Supplier Connection Facilities, Purchaser shall convey Supplier Connection Facilities to the Supplier by bill of sale without additional consideration from the Supplier.

SECTION 10 ASSIGNABILITY

A. Assignment by Purchaser. The Purchaser shall not assign or transfer this Contract or any rights or interests herein without the advance written consent of the Supplier.

B. Assignment by the Supplier. Except as otherwise set forth in this Subsection 10.B, the Supplier shall not assign or transfer this Contract or any rights or interests herein without the advance written consent of the Purchaser. Notwithstanding the preceding sentence, the right to receive all payments that are required to be made by the Purchaser to the Supplier in accordance with the provisions of this Contract may be assigned by the Supplier to any Trustee as provided in any Bond Ordinance to secure the payment of the principal of and the premium, if any, and interest on the Bonds as those amounts come due, subject to the application of those payments as may be provided in any Bond Ordinance. The Purchaser, upon notice of assignment to any such Trustee, shall make all payments directly to such Trustee. Further, the rights of the Supplier to enforce the provisions of this Contract may be assigned to any such Trustee and, in such event, such Trustee shall have the right to enforce this Contract at law or in equity with or without the further consent or participation of the Supplier. The Supplier also may retain the right to enforce this Contract, notwithstanding any assignment to a Trustee.

SECTION 11 FORCE MAJEURE

If by reason, of *Force Majeure*, either Party to this Contract shall be rendered unable wholly or in part to carry out its obligation under this Contract, then if such Party shall give notice and full particulars of such *Force Majeure* in writing to the other Party within a reasonable time after occurrence of the event or cause relied on, the obligation of the Party giving such notice, so far as it is affected by such *Force Majeure,* shall be suspended during the continuance of the inability then claimed, but for no longer period, and any such Party shall endeavor to remove or overcome such inability with all reasonable dispatch. The settlement of strikes and lockouts or lawsuits shall be entirely within the discretion of the Party having the difficulty, and the above requirement that any *Force Majeure* shall be remedied with all reasonable dispatch shall not

require the settlement of strikes and lockouts or lawsuits by acceding to the demands of the opposing party or parties when such settlement is unfavorable to it in the judgment of the Party having the difficulty.

SECTION 12 SUPPLIER DEFAULTS, PURCHASER TERMINATION

Failure by the Supplier to deliver Potable Water to the Purchaser as required by this Contract for a period of seven days after written notice from the Purchaser to the Supplier of such failure, or a failure of the Supplier to perform any other obligation under this Contract for a period of 60 days after written notice from the Purchaser to the Supplier of such failure, shall be a default of the Supplier under this Contract, unless any such failure is excused or exercised pursuant to this Contract. If the Supplier defaults under this Contract, then the Purchaser may, as its sole and exclusive remedy, declare this Contract null and void after giving the required notice set forth above.

SECTION 13 PURCHASER RIGHTS AND OBLIGATIONS

The Purchaser shall have: (1) no right to terminate, cancel, or rescind this Contract, except for the right of termination in accordance with Section 12 of this Contract; (2) no right to withhold from the Supplier or any Trustee who is an assignee of the Supplier pursuant to this Contract payments due under this Contract; (3) no right to recover from the Supplier or any member of the Supplier's corporate authorities amounts previously paid under this Contract unless paid in error or contrary to the provisions of this Contract or law; (4) no right of reduction or set-off against the amounts due or to become due under this Contract to the Supplier; and (5) no lien on any amounts in any fund established by the Supplier for any reason or on account of the existence or occurrence of any event, condition, or contingency, whether foreseen or unforeseen or foreseeable or unforeseeable by the Purchaser or the Supplier or any other person. It is the intent hereof that the Purchaser shall be absolutely and unconditionally obligated to make all payments under this Contract except as otherwise expressly provided in this Contract. The Supplier may

issue its Bonds in specific reliance on the limitations set forth in this Section with respect to the rights of the Purchaser.

SECTION 14 TAX COVENANTS

At no time shall the Purchaser take any action or fail to take any action that would, as a result of such action or inaction and independent of any other action or inaction of the Supplier or any Supplier Customer: (a) prevent the Supplier from issuing Bonds as "governmental use" bonds within the meaning of Section 141 of the Internal Revenue Code of 1986; (b) cause interest on any of the Supplier's Bonds to become subject to federal income taxes in addition to federal income taxes to which interest on such Bond is subject on the date of original issuance thereof; or (c) cause any Supplier Bonds to become "private activity bonds" within the meaning of Section 141 of the Internal Revenue Code of 1986.

SECTION 15 COOPERATION IN ISSUANCE OF OBLIGATIONS

The Purchaser and the Supplier shall cooperate with each other in the issuance of their respective debt obligations. Each shall comply with all reasonable requests of the other and shall, upon reasonable request of the other:

A. Make available general and financial information about itself (which obligation shall be deemed satisfied by delivery of a complete set of the annual audited financial statements for the most recently completed fiscal year, duly certified by independent certified public accountants); and

B. Consent to publication and distribution of its financial information; and

C. Certify that general and financial information about it is accurate, does not contain an untrue statement of a material fact, and does not omit to state a material fact necessary in order to make the statements in that information, in light of the circumstances under which they were made, not misleading; and

D. Make available certified copies of official proceedings; and

E. Provide reasonable certifications to be used in a transcript of closing documents; and

F. Provide reasonably requested opinions of counsel of its choice as to the validity of its actions taken with respect to and the binding effect of this Contract, title to the applicable system, pending or threatened litigation which could materially affect its performance hereunder, and other reasonably related opinions. Any such opinion that is requested shall be at the sole cost and expense of the requesting Party.

SECTION 16 REGULATORY BODIES

The Supplier and the Purchaser through this Contract seek to exercise and maintain all sovereign rights granted to them under and through the Constitution and laws of the State of Illinois. This Contract shall be subject to all valid rules, regulations, and laws applicable hereto passed or promulgated by the United States of America, the State of Illinois, any governmental body or agency having lawful jurisdiction, and any authorized representative or agent of any of them; provided, however, that this clause shall not be construed as waiving the right of either Party to challenge the validity of such rule, regulation, or law on any basis, including the impairment of this Contract.

SECTION 17 OTHER WATER SUPPLIERS; EMERGENCY INTERCONNECTION.

A. Other Suppliers. Notwithstanding any of the provisions of this Contract, the Supplier is not prohibited by this Contract from entering into cooperative arrangements with other suppliers or users of Potable Water to provide Potable Water to each other to meet each other's water needs, provided that these arrangements do not interfere, except in emergencies, with the delivery of Potable Water to the Purchaser Waterworks System.

B. Emergency Interconnection. In addition to the Supplier Connection Facilities and Purchaser System Connection Facilities, the Purchaser may, subject to review and approval by Supplier, construct emergency interconnection facilities between the Purchaser Waterworks System and the Supplier Waterworks System at a location and in a manner to be mutually agreed

upon by the Parties (the "***Interconnection Facilities***"). Prior to undertaking construction of such Interconnection Facilities, the Purchaser shall prepare, and submit to the Supplier for its review and approval, complete detailed plans, specifications, and construction contract documents for the Interconnection Facilities; such Interconnection Facilities may be required to include air-gap protection features, subject to review by Supplier's Engineer. The Purchaser shall be responsible for undertaking and paying for all work related to the Interconnection Facilities, and such construction shall be coordinated with the Supplier. Upon completion, the Interconnection Facilities shall be used and governed by the following terms:

1. The Purchaser may only draw water from the Interconnection Facilities for a temporary and/or unexpected disruption of the designed and established manner of supply or distribution of Potable Water within the Purchaser Waterworks System (an "***Emergency Condition***"), whether arising from a *Force Majeure* event or otherwise. Neither repeated and chronic production outages lacking reasonable aggressive correction efforts, nor the inability of the designed production capacity to meet peak water use demands shall be regarded as an Emergency Condition. Notwithstanding the foregoing, any and all water furnished under this Subsection 17.B shall be deemed to have been used for emergency purposes only.

2. To the extent that an Emergency Condition occurs, the Purchaser shall make an emergency request and receive the consent of the Supplier prior to drawing Potable Water through the Interconnection Facilities. The Supplier shall grant permission for emergency service, unless providing such service would present a hazard, not merely an inconvenience, to the Supplier Customers.

3. In granting permission to draw Potable Water through the Interconnection Facilities, the Supplier will deliver Potable Water to the Purchaser in the volume available at the normal operating pressure of the Supplier Waterworks System. The Supplier retains the right to terminate the emergency service, upon oral communication or other notice as may be reasonable under the circumstances, in the event it determines that a condition has developed or reasonably might develop that makes continued emergency service hazardous to its Customers. Unusual delay by the Purchaser in the correction of the causes for the Emergency Condition shall also justify termination of the emergency service by the Supplier upon 24 hours notice.

   If, during a period of emergency service, the Supplier finds it necessary to limit the use of Potable Water by its Customers by imposing lawn and garden sprinkling restrictions or otherwise, the Purchaser shall, upon notification by the Supplier, impose the same water use limitations and restrictions on its customers connected to Purchaser Waterworks System.

4. The Potable Water to be delivered through the Interconnection Facilities shall be of the same quality as the Potable Water otherwise to be furnished by the Supplier to the Purchaser under this Contract.

5. The Purchaser agrees to pay for the Potable Water drawn through the Interconnection Facilities at the same rates and fees as if drawn through the Connection Facilities.

SECTION 18 EFFECTIVE DATE: TERM

A. Effective Date. This Contract shall be effective immediately after authorization and execution by both Parties hereto.

B. Term. This Contract shall continue in force and effect for a period that is coterminous with the term of the First Amended Water Supply Contract between the Northwest Water Commission and the Village of Arlington Heights, the Village of Buffalo Grove, the Village of Palatine and the Village of Wheeling, dated April 4, 1983 and any subsequent amendments or extensions thereto. Provided however, that the term of this Contract shall not exceed 20 years in total from the Commencement Date at which time this Contract and the Supplier's obligations to provide water shall terminate, unless otherwise terminated earlier pursuant to the terms of this Contract. Notwithstanding any other provision contained in this Contract, any right of the Purchaser to receive water from the Supplier shall automatically terminate upon either:

i. the termination of the contract between the Supplier and Northwest Water Commission, or

ii. termination of the contract between the Northwest Water Commission and the City of Evanston;

provided, however, that any termination of a contract described in subsection i. or ii. of this Section 18.B shall not affect the Parties' obligations under this Contract in the event that Supplier (in its discretion) enters into one or more other agreements that allow Supplier to receive adequate Potable Water to serve Purchaser consistent with the terms of this Contract (an "***Alternative Source Agreement***"). Provided however, that it shall not be a Supplier default under this Agreement if Supplier does not seek to enter, or does not enter, into an Alternative Source Agreement.

SECTION 19 TERMINATION BY SUPPLIER

Notwithstanding any other provision of this Contract, upon the occurrence of any of the following events, the Supplier, in its sole discretion, may terminate this Contract for the following reasons:

a. If the Purchaser fails to make any payment required under this Contract on or before its due date and fails to cure that failure within fifteen business days after demand therefor from the Supplier; or
b. Termination of the Supplier; or
c. Immediate threat of damage to the Supplier Waterworks System or of danger to public health, unless the Supplier, with the assistance of the Purchaser as appropriate, can reasonably and promptly mitigate the threat of damage or danger by engineering, operational, or other means short of termination of this Contract; or

The Supplier's inability to receive water from the Northwest Water Commission or the inability of the Northwest Water Commission to receive water from the City of Evanston; provided that any temporary interruption in service by the Northwest Water Commission to the Supplier shall only authorize the Supplier's temporary delivery of Potable Water to the Purchaser Waterworks System and shall not be grounds for termination of this Contract. Notwithstanding the preceding sentence, the inability of Supplier to receive Potable Water from the Northwest Water Commission or the City of Evanston shall not be grounds for termination of this Contract if Supplier has entered into an Alternative Source Agreement, and it shall not be a Supplier default under this Agreement if Supplier does not seek to enter, or does not enter, into an Alternative Source Agreement.

SECTION 20. GENERAL

A. Governing Law. This Contract and the rights of the Parties hereunder shall be interpreted and enforced in accordance with the internal laws, but not the conflicts of laws rules, of the State of Illinois.

B. Notices. Unless otherwise provided in this Contract, all notices required or permitted to be given under this Contract shall be given by the Parties by: (i) personal delivery; (ii) delivery by certified mail, with a return receipt requested, through the United States mail, (iii) deposit with a nationally recognized overnight delivery service, or (iv) delivered by electronic mail, addressed as stated in this Section. Notice by hand delivery or overnight courier service shall be deemed received when delivered; notice by electronic mail shall be deemed received when delivered, provided that a copy of such notice is also sent by (a) certified mail (as provided above), (b) personal delivery, or (iii) a nationally recognized overnight delivery service; and notice by mail shall be deemed received three days after it is placed in the U.S. mail. The address of any Party may be changed by written notice to the other Parties, but no notice of a change of address shall be effective until actually received. Notice that is actually received will be deemed valid, even if received by a method or in a manner that conflicts with this Section. Notices and communications to the Parties will be addressed to, and delivered at, the following addresses:

For notices and communications to the Supplier:

Village of Buffalo Grove
50 Raupp Blvd.
Buffalo Grove, IL 60089
Attn: Village Manager
E-Mail: DBragg@vbg.org

For notices and communications to Purchaser:

Village of Long Grove
3110 Old McHenry Road
Long Grove IL 60047
Attn: Village Manager
E-Mail: csparkman@longgroveil.gov

C. Calendar Days and Time. Any reference herein to “day” or “days” shall mean calendar and not business days unless the word “business” is used. If the date for giving of any notice required to be given hereunder or the performance of any obligation hereunder falls on a Saturday, Sunday, or federal holiday, then said notice or obligation may be given or performed

on the next business day after such Saturday, Sunday, or federal holiday. Any reference herein to time of day shall refer to local time for Buffalo Grove, Illinois.

D. Entire Agreement. This Contract, including exhibits hereto, contains the entire agreement between the Parties hereto with respect to the transactions contemplated by this Contract and matters related thereto, and does hereby supersede and render null and void and of no further force or effect any and all prior agreements, drafts of agreements and understandings between the Parties.

E. Amendments. This Contract may not be modified or amended except by a written instrument executed by each of the Parties hereto.

F. Further Action. Each of the Parties hereto agree from time to time to execute and deliver such further instruments, and to take such further action not inconsistent with the provisions of this Contract, as may reasonably be necessary in order to fully perform and carry out the terms and intent hereof.

G. Captions. The headings, titles or captions contained in this Contract have been inserted only as a matter of convenience and for reference, and such captions in no way define, limit, extend, or describe the scope of this Contract or the intent of any provision hereof.

H. Exhibits. Exhibits A and B attached hereto are, by this reference, incorporated herein. In case of any conflict between an Exhibit to the Contract and the text of this Contract, the text of this Contract shall control.

I. Changes in Laws. Unless otherwise explicitly provided in this Contract, any reference to laws, ordinances, rules, or regulations shall include such laws, ordinances, rules, or regulations as they may be amended or modified from time to time hereafter.

J. Time is of the Essence. Time is of the essence in the performance of all terms and provisions of this Contract.

K. Pending Lawsuits. There are no agreements in effect and no lawsuits pending or, to the best of either Parties' knowledge, threatened, that would materially and adversely affect the ability of either Party to fulfill the terms of this Contract.

L. Responsible Party. Within 30 days after the Effective Date, the Purchaser shall notify the Supplier of a designated individual and a telephone number or numbers at which such individual with knowledge of the Purchaser Waterworks System can be reached at all times in the event of an emergency. The Purchaser shall at all times keep current the information of such designated individual or any change in the designated individual.

M. Severability. In the event any part or portion of this Contract, or any provision, clause, wording, or designation contained within this Contract, is held to be invalid by a court of competent jurisdiction, such part, portion, provision, clause, wording, or designation shall be deemed to be excised from this Contract and the invalidity thereof shall not affect the remainder of this Contract.

N. Reimbursement of Professional Fees/Costs. The Purchaser agrees to reimburse the Supplier for all legal, engineering and other professional fees incurred by the Supplier related to the design, review, and approval of all Connection Facilities and Interconnection Facilities necessary to provide the Purchaser with water pursuant to this Contract. The Parties shall confer regularly to estimate fees, to review fees that have been incurred, and to consider what fees are estimated still to be incurred, and the Supplier will take all reasonable and appropriate steps to avoid excessive fees.

IN WITNESS WHEREOF, the Parties hereto have caused their respective corporate names to be subscribed hereto and their respective corporate seals to be affixed hereto and attested by their duly authorized officers, all on the date first shown above.

[The remainder of this page left intentionally blank.]

Village of Buffalo Grove

By: _____
Name: _____
Title: _____

ATTEST:

By: _____
Clerk

Village of Long Grove

By: _____
Name: _____
Title: _____

ATTEST:

By: _____
Clerk

LIST OF EXHIBITS

Exhibit A: Connection Area

Exhibit B: Connection Facilities Concept Plan

EXHIBIT A

CONNECTION AREA MAP

EXHIBIT B

CONNECTION FACILITIES CONCEPT PLAN

4858-1726-7947, v. 8

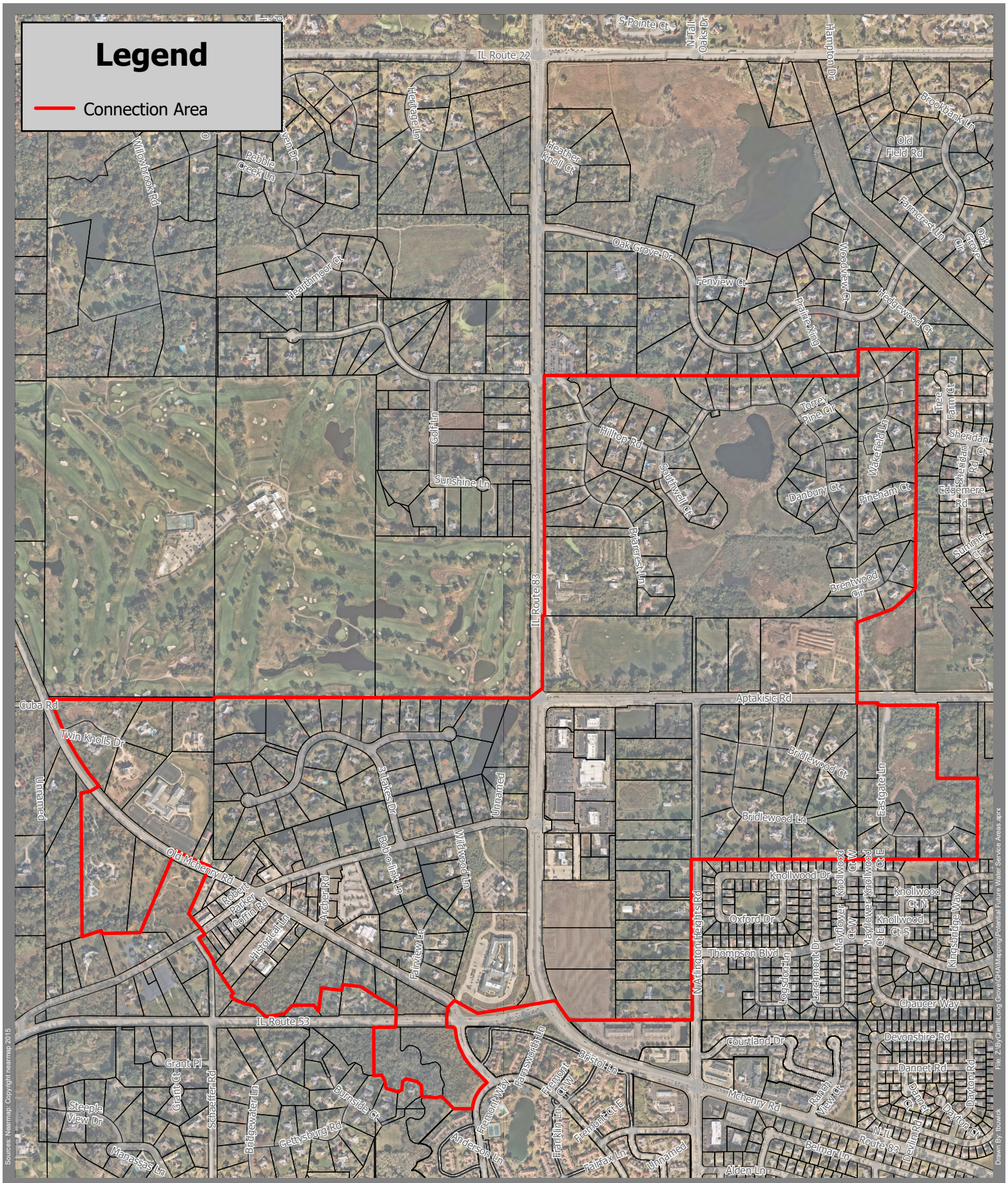

GEWALT HAMILTON ASSOCIATES, INC.
CONSULTING ENGINEERS
www.gha-engineers.com

Exhibit A Connection Area

Long Grove, IL

1 inch = 1,000 Feet

N

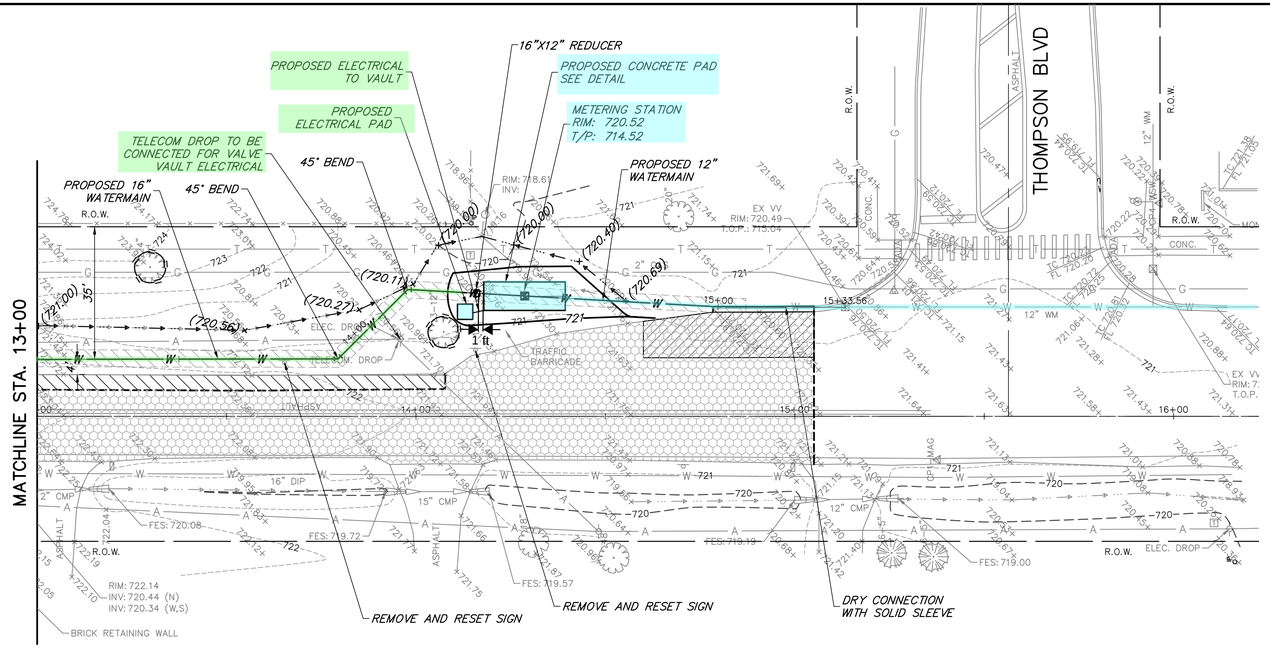

VILLAGE OF LONG GROVE OWNERSHIP

VILLAGE OF BUFFALO GROVE OWNERSHIP

GRAPHIC SCALE

20 0 10 20

(IN FEET)

H. 1"= 20 ft. V. 1"= 5 ft.

PROPOSED LEGEND

- HMA SURFACE COURSE MIX D, 1.75"
- CLASS D PATCH, 4"
- CURB & GUTTER (REGULAR)
- PROPOSED WATERMAIN
- PROPOSED VALVE VAULT
- PROPOSED VALVE BOX
- PROPOSED FIRE HYDRANT
- PROPOSED SPOT ELEVATION
- SWALES

N ARLINGTON HEIGHTS RD

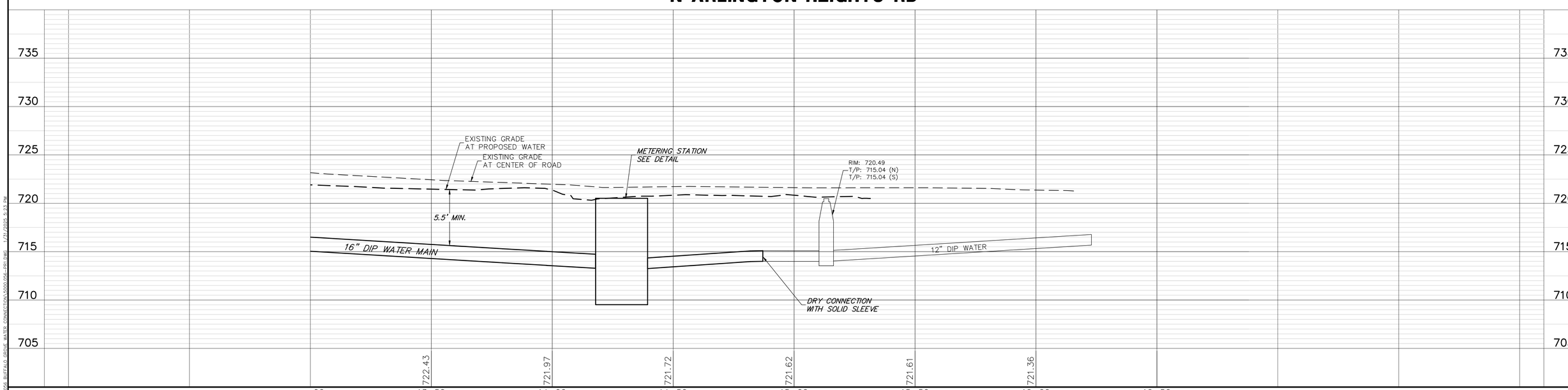

GHA GEWALT HAMILTON ASSOCIATES, INC.
625 Forest Edge Drive ▪ Vernon Hills, IL. 60061
TEL 847.478.9700 ▪ FAX 847.478.9701

COPYRIGHT NOTICE
This drawing is the property of Gewalt-Hamilton Assoc., Inc. and is not to be used for any purpose other than the specific project and site named herein, and cannot be reproduced in any manner without the express written permission from Gewalt-Hamilton Associates, Inc.

EXHIBIT B

BUFFALO GROVE WATER CONNECTION
N ARLINGTON HEIGHTS RD
LONG GROVE, ILLINOIS 60047

NO.	BY	DATE	REVISION	NO.	BY	DATE	REVISION

FILE: 5000.056-PR1.dwg
DRAWN BY: CJ DATE: 10-18-24
GHA PROJECT # 5000.56
CHECKED BY: WR DATE: 10-18-24
SCALE: 1"=20'
SHEET NUMBER: 1 OF 02 SHEETS

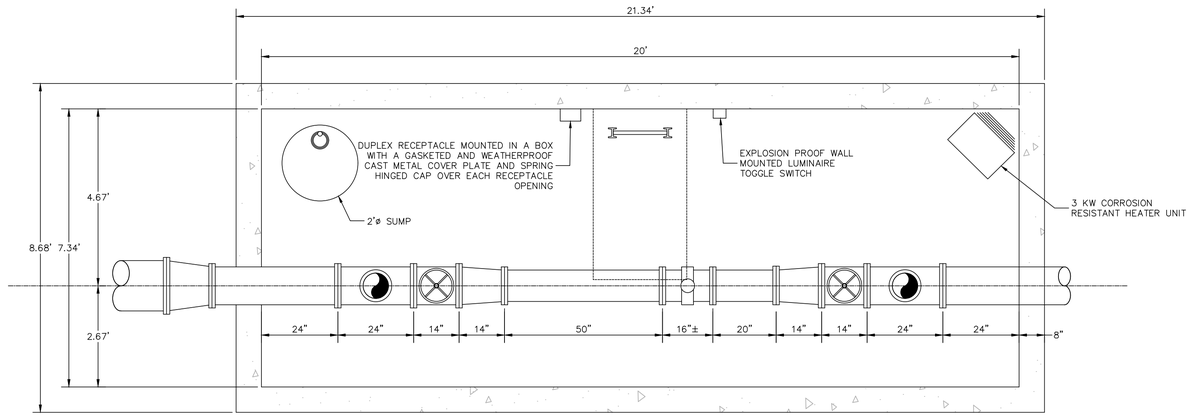

PLAN VIEW

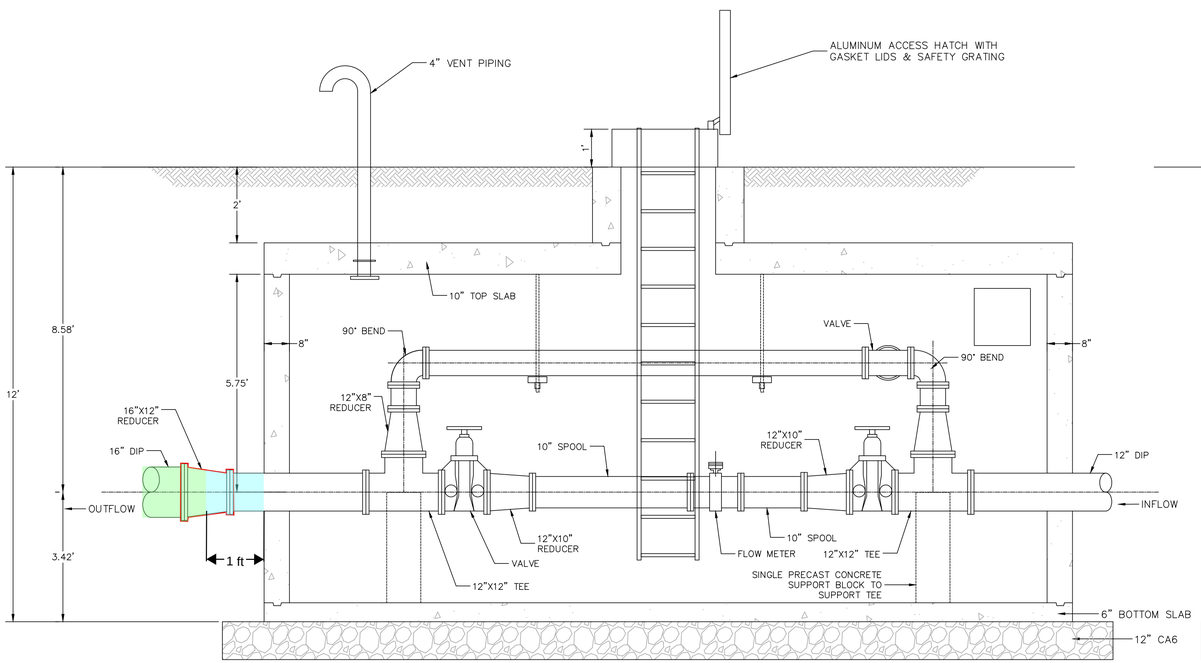

VILLAGE OF LONG GROVE OWNERSHIP

VILLAGE OF BUFFALO GROVE OWNERSHIP

SECTION VIEW

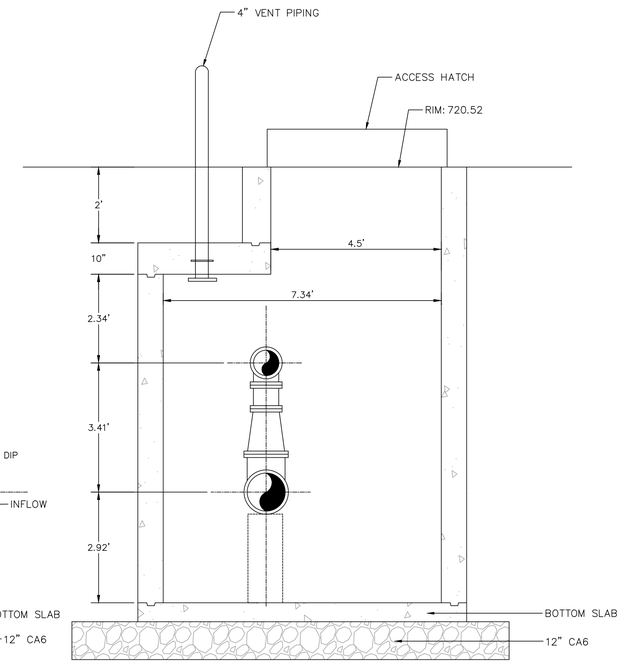

SECTION VIEW

GHA GEWALT HAMILTON ASSOCIATES, INC.
625 Forest Edge Drive ▪ Vernon Hills, IL. 60061
TEL 847.478.9700 ▪ FAX 847.478.9701

COPYRIGHT NOTICE
This drawing is the property of Gewalt-Hamilton Assoc., Inc. and is not to be used for any purpose other than the specific project and site named herein, and cannot be reproduced in any manner without the express written permission from Gewalt-Hamilton Associates, Inc.

EXHIBIT B

BUFFALO GROVE WATER CONNECTION
NORTH ARLINGTON HEIGHTS ROAD
LONG GROVE, ILLINOIS 60047

NO.	BY	DATE	REVISION	NO.	BY	DATE	REVISION

FILE: 5000.056-DT.dwg
DRAWN BY: CJ
DATE: 10-18-24
GHA PROJECT #: 5000.056
CHECKED BY: WR
DATE: 10-18-24
SCALE: N.A.
SHEET NUMBER: 2 OF 02 SHEETS

AGENDA ITEM SUMMARY

BUFFALO GROVE VILLAGE BOARD

Regular Meeting: March 17, 2025

AGENDA ITEM 11.a.
Pre-Application Discussion for Dream Car Wash Development at 1355 Dundee Road

Contacts

Liaison: Trustee Weidenfeld
Staff: Nicole Woods

Staff Recommendation

Staff recommends referral.

Recommended Motion

I move to refer to the proposal for a Dream Car Wash Development at 1355 Dundee Road to the Planning and Zoning Commission.

Summary

See attached memorandum.

Strategic Alignment

Guiding Principle

Principle 3: Plan and Invest in the Future

Goal

Goal 2: Enhanced, beautiful, safe and sustainable neighborhoods

File Attachments

1. Memo - Dream Car Wash 1355 Dundee Rd
2. Plan Set - Dream Car Wash 1355 Dundee Rd

smart. with heart.
50 Raupp Blvd, Buffalo Grove, IL 60089 847-459-2500 vbg.org

MEMORANDUM

DATE:	March 17, 2025
TO:	Village Manager Dane Bragg
FROM:	Nicole Woods, Community Development Director Kelly Purvis, Deputy Community Development Director
SUBJECT:	Pre-application discussion Dream Clean Carwash at 1355 W. Dundee Rd

RECOMMENDATION

Staff recommends discussion and referral to the Planning and Zoning Commission.

PROJECT BACKGROUND

Dream Clean Operating Company, LLC., the contract purchaser of 1355 W. Dundee Road, is seeking an amendment to the Plaza Verde West Planned Unit Development Ordinance to redevelop the site and construct a new carwash. The site is currently 1.03-acres and improved with the former Bank of America building, which has been vacant for over a decade.

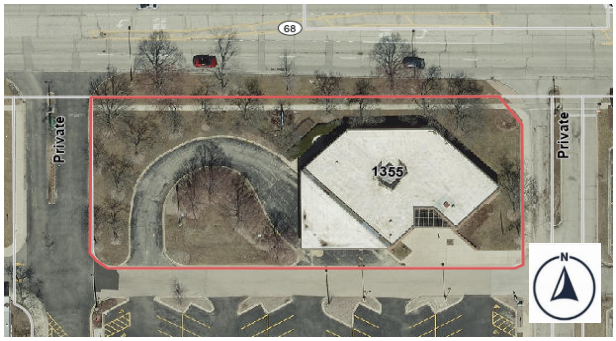

Figure 1. Aerial image of 1355 Dundee Rd.

The proposal is to demolish the existing building and develop a new 6,000 sf carwash with a new parking lot and accessory structures. To accommodate this new development, the plan also proposes increasing the to size to 1.13 acres thereby necessitating a resubdivision.

The project will require an Amendment to the Planned Unit Development and preliminary plan approved by Ordinance No. 1971-033, a Final Plat of Subdivision, and a variation from the front yard setback requirement. Prior to starting the formal application process, the petitioner is seeking comments from the Village Board along with a referral to the Planning & Zoning Commission.

PLANNING & ZONING ANALYSIS

Use

The property is located in the B-3 Planned Business Center District and is part of the Plaza Verde West Planned Unit Development. The carwash requires an amendment to the PUD, however this use is a permitted use in the B-3 district and is compatible with the surrounding commercial uses in the Dundee Road Corridor. The hours of operation will be Monday – Sunday from 8:00am – 8:00pm, with expected peak usage on weekends and weekday evenings. The carwash will typically be staffed with four employees.

smart. with heart.
50 Raupp Boulevard, Buffalo Grove, IL 60089 847-459-2500 vbg.org

Bulk and Height

The proposed carwash will be a one-story structure with a height of approx. 35 feet at its tallest point, (its architectural peak), while the majority of the building is 16 feet. The building is proposed to be set back 25 feet from the front property line. A variation will be needed, as the code requires buildings to be set back no less than the height of the building in the B-3 District. The proposed building would meet all other bulk requirements of the district.

Site Design and Accessibility

Access to the site will be provided from a private drive within the Villa Verde development located on the southwest side of the property. This point will serve as both the entrance and exit. Two lanes for vehicle stacking will run along the south portion of the property and traffic will circulate through a counterclockwise loop.

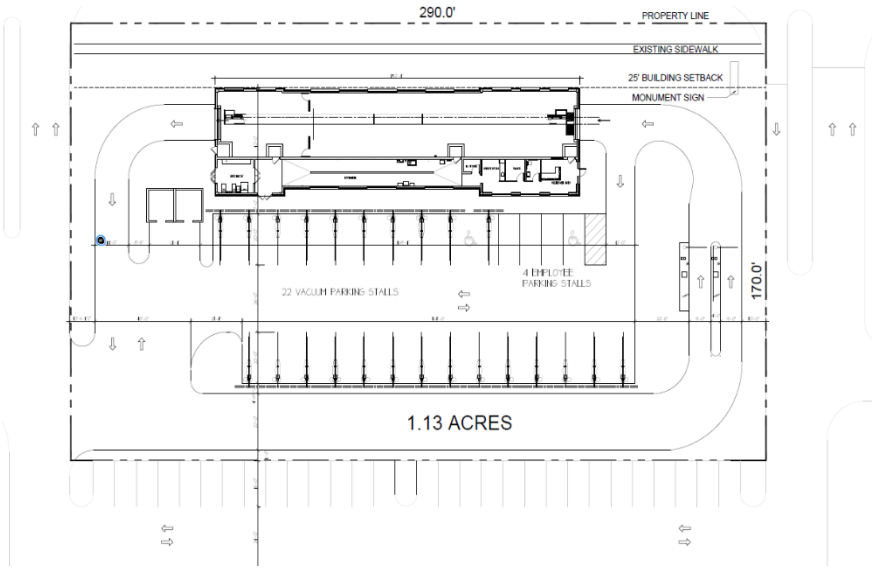

Figure 2. Dream Clean Carwash Site Plan

To accommodate for circulation and parking for the site, the existing southern lot line will be moved by approximately 15 feet. New parking stalls and a drive aisle will be featured south of the proptery. A traffic study will be conducted to assess the proposed development and circulation within the Villa Verde development. A noise analysis will also be conducted.

The plan meets parking standards and proposes a total of 26 on-site parking spaces (22 of which will be equipped with vacuums).

Stormwater Analysis

The petitioner will work closely with staff to prepare a stormwater management and maintenance plan.

Figure 3. Dream Clean Carwash Rendering

Building Materials and Landscaping

The carwash building will feature modern design with varying roof lines and high-quality building materials, including brick and stone masonry. A preliminary landscape plan has been provided. Staff will continue to work with the petitioner on the building elevations and landscaping plan.

ACTION REQUESTED

The Petitioner is seeking comments from the Village Board related to the proposed plan. Should the Board conceptually support the plan, the item can be referred to the Planning and Zoning Commission.

Dream Clean Operating Company LLC, a Delaware limited liability company ("Dream Clean"), is looking to apply for an Amendment to the current PUD for the property located at 1355 W Dundee Rd., Buffalo Grove, IL 60089 for the operation of a Car Wash as provided for pursuant to applicable Buffalo Grove ordinances.

The parcel to be purchased is the former Bank of America building along with a portion of the existing parking lot to the south of the bank's current parking lot. The site plan and architectural rendering as submitted to the Village outlines the full extent of the development as well notes the traffic patterns as intended.

Dream Clean is a regional car wash operator currently operating seven car wash facilities as recently purchased and refurbished. At present time, Dream Clean is expanding its portfolio through the acquisition and development of a number of vacant parcels throughout Northern Illinois, presently under contract, and seeking entitlement to construct car washes on approximately ten sites at present time.

The specific details of the proposed development of the car wash are as follows:

- The total property to be purchased and covered by the Amendment to the PUD is approximately 1.13 Acres.
- The building shall be approximately 6,000 sq. ft. in size.
- Off street parking shall include dedicated spaces (3 regular, 1 handicapped), as well as 22 vacuum stalls.
- The typical hours of operation will be 8 a.m. to 8 p.m.
- There will be 4 employees on-site during operation of the car wash. (*Total employees for this location will be 8-12*)
- Peak usage of the car wash tunnel shall be weekdays 4 p.m. to 6 p.m. and all day Saturdays/Sundays.

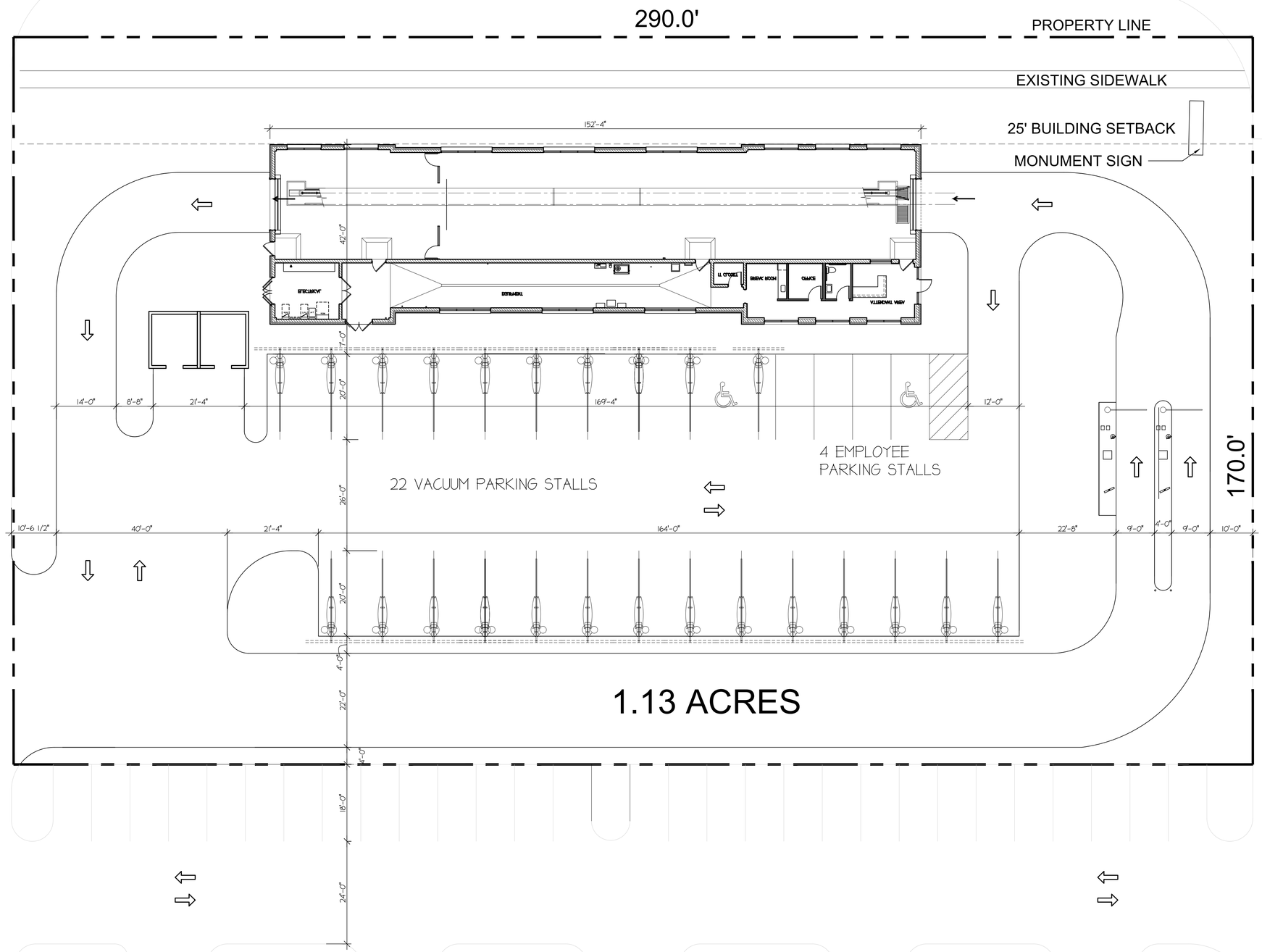
290.0'
PROPERTY LINE
EXISTING SIDEWALK
25' BUILDING SETBACK
MONUMENT SIGN
152'-4"
42'-0"
7'-0"
20'-0"
26'-0"
20'-0"
4'-0"
22'-0"
8'-0"
18'-0"
24'-0"
14'-0"
8'-8"
21'-4"
169'-4"
12'-0"
10'-6 1/2"
40'-0"
21'-4"
164'-0"
22'-8"
9'-0"
4'-0"
9'-0"
10'-0"
170.0'
22 VACUUM PARKING STALLS
4 EMPLOYEE
PARKING STALLS
1.13 ACRES

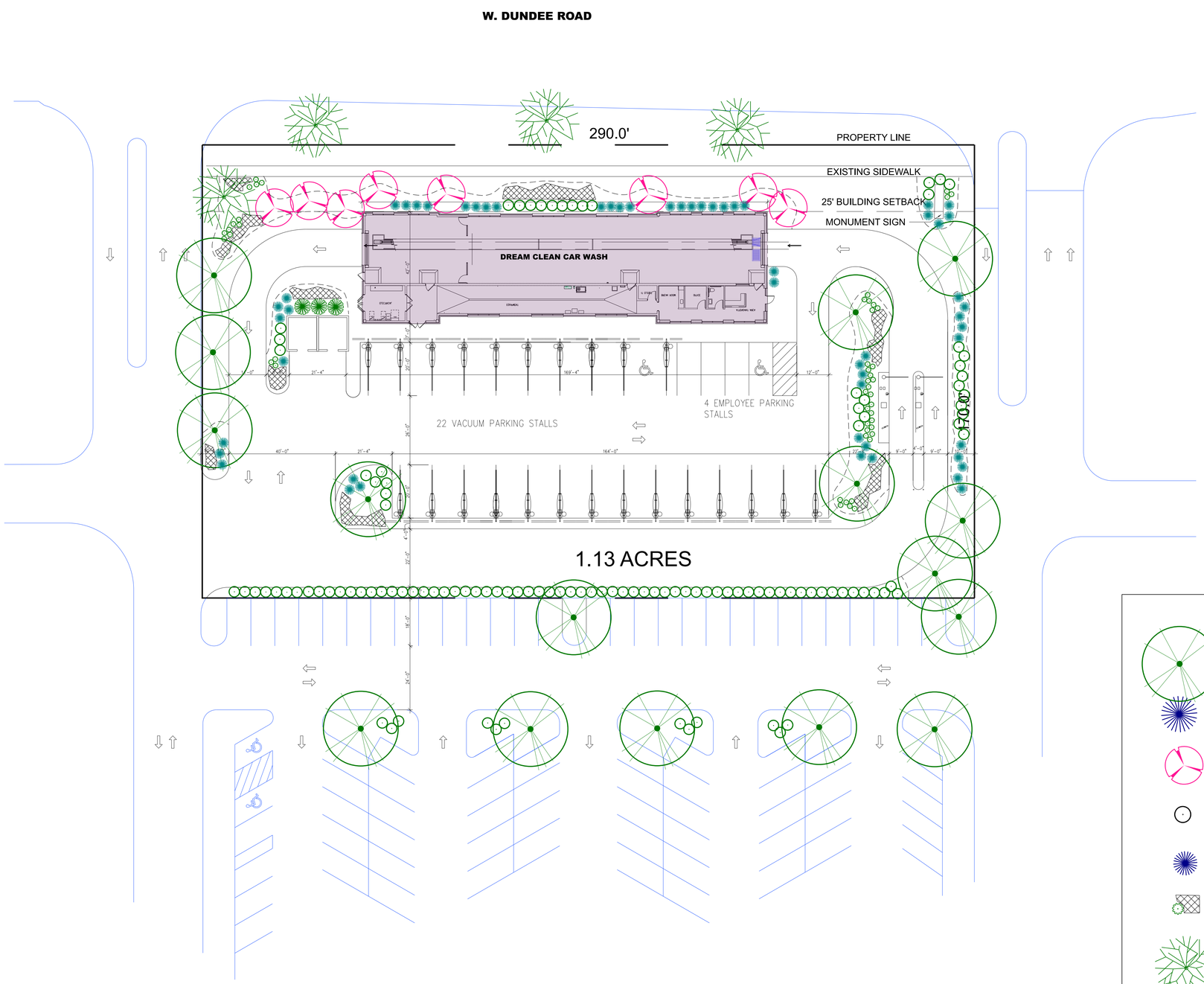

LEGEND

- DECIDUOUS TREES
- EVERGREEN TREE
- ORNAMENTAL TREE
- DECIDUOUS SHRUB
- EVERGREEN SHRUB
- PERENNIALS AND GRASSES
- EXISTING TREES TO REMAIN

0 20 40
GRAPHIC SCALE - FEET

Dream Clean
1355 W. Dundee Road
Buffalo Grove, IL 60089

Prepared For:
Dream Clean Operating Company
625 Greenleaf Ave.
Wilmette, IL 60091
email: mzarvedak@dreamcleancw.com

ARCH AMERICA
34129 North US 41, Suite 213
Gurnee, IL 60031
Phone 847.625.7755

DREAM CLEAN CAR WASH

WEBSTER, MCGRATH & AHLBERG, LTD.
LAND SURVEYING - CIVIL ENGINEERING - LANDSCAPE ARCHITECTURE
Over 100 Years of Service to Clients
2100 MANCHESTER RD, BUILDING A, SUITE 203
WHEATON, ILLINOIS 60187
PH: (630)668-7603 WEB: WWW.WMALTD.COM
DESIGN FIRM LICENSE NO. 184-000115

REV#	DATE	REVISION DESCRIPTION	BY

Section-Township-Range
Cook:

JOB # 45027	SURV: -
DRAWN: BMB	REVIEW: SMR
SCALE: 1"=20'	DATE: 03.05.25

SHEET NAME

Preliminary Landscape Plan

SHEET #
L-1

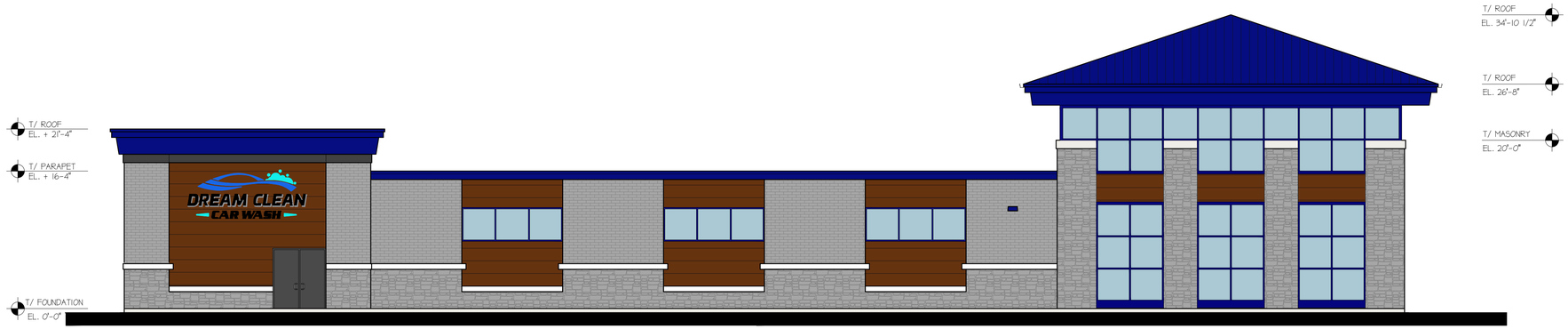

SOUTH ELEVATION

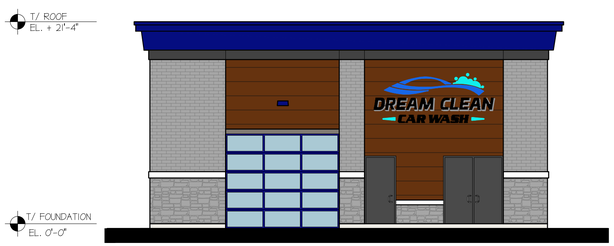

WEST ELEVATION EXIT

EAST ELEVATION ENTRANCE

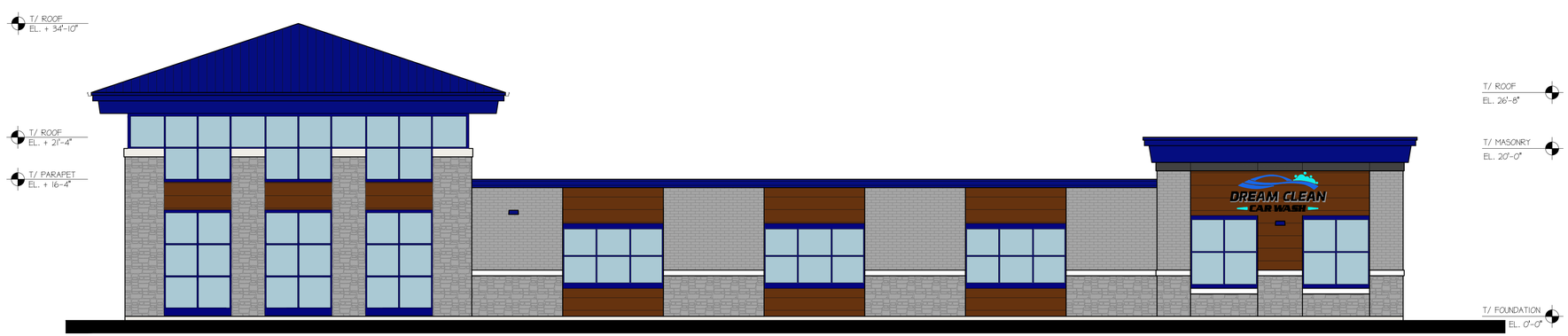

NORTH ELEVATION FACING DUNDEE

NEW CAR WASH DEVELOPMENT FOR

Dream Clean

ILLINOIS

December 16, 2024

Archamerica Job No. 23029

Elevations

0 5' 10' 20' 40'

ARCHAMERICA

34121 N. US 45, Suite 213
Grayslake, Illinois 60030

Phone 847-336-6600
Fax 847-336-6601

DREAM CLEAN
CAR WASH

DREAM CLEAN